Maestro 80/2 RCH
Maestro 80/3 RCH

BUY NOW
BUY NOW

G20/G25/G25.3 (Natural gas) G31 (Propane)

English

Installation manual

Store this document in a safe place

CE

959.094.06.EN
DRU-677279-EN-US-0418-7

EN

English

Contents

1. Introduction
2. CE declaration
3. SAFETY
    3.1 General
    3.2 Regulations
    3.3 Precautions / safety instructions at installation
    3.4 Principle of ignition cycle
4. Removing the packaging
5. Installation
    5.1 Type of gas
        5.1.1 Reconstruction to different type of gas
    5.2 Gas connection
    5.3 Electric connection
    5.4 Placing the appliance
    5.5 Placing a built-in appliance
    5.6 Placing the chimney breast
    5.7 Placing the control hatch
    5.8 Concentric system
    5.9 Connection to an existing chimney (C91)
    5.10 Additional instructions
    5.11 Suspended placement of appliance
    5.12 Additional installation options
        5.12.1 Platform combined with lower decorative strip
        5.12.2 Platform connecting to the glass
        5.12.3 Rear wall on the glass of the side pane
    5.13 Mantel iron
    5.14 Glass panes
        5.14.1 Removing the front glass pane
        5.14.2 Placing the glass pane
    5.15 Setting the appliance
        5.15.1 Restrictor slide (R) and Flue gas distribution plate (T)
        5.15.2 Air inlet guide
        5.15.3 PowerVent® (if applicable)
    5.16 Placing the wood set
        5.16.1 Wood set
6. Control
    6.1 Remote controls
    6.2 Alternative controls
7. Final inspection
    7.1 Gastightness
    7.2 Gas pressure/line-pressure
    7.3 Ignition main burner
    7.4 Flame picture
8. Maintenance
    8.1 Parts
9. Delivery
10. Malfunctions

Appendix 1 Malfunctions
Appendix 2 Tables
Appendix 3 Figures

1. Introduction

DRU, a manufacturer of gas-fired heating appliances, develops and produces products that comply with the highest possible quality, performance and safety requirements. This appliance has a CE label, which means that it complies with the essential requirements of the European Gas Appliance Directive. The appliance is supplied with an installation manual and a user manual. Installation and maintenance of the appliance should be performed by a professional certified expert with a proven knowledge and demonstrable competence in this field. A professional expert takes all technical aspects such as heat output, gas connection and electricity into account, as well as the flue gas discharge requirements. The information in this installation manual will ensure the appliance is installed in such a way that it will function properly and safely. If the installation instruction is not clear, national/local regulations must be observed.

This manual discusses the installation of the appliance and the regulations that apply to the installation. In addition, the appliance's technical data are shown and information is provided about maintenance, possible malfunctions that might occur and their possible causes.

The figures are at the back of this installation manual, in the appendix.
Fully and carefully read and use this installation manual, before installing the appliance. When using the DRU Powervent system® or DRU CM system®, the accompanying installation manual should also be read completely and carefully, before installation work is started.

The following symbols are used in the manuals to indicate important information:

➢	Work to be performed
!Tip	Suggestions and recommendations
!Caution	You will need these instructions to prevent problems that might occur during installation and/or use.
!Caution	You need these instructions to prevent fire, personal injury or other serious damages.

After final delivery, the manuals should be handed over to the user.

2. CE declaration

Internal precautions at the company will guarantee that appliances produced by DRU comply with the essential requirements and directives of the regulation concerning gas combustion appliances and the standards applied for that purpose. This declaration will lose its validity if adjustments are made to the appliance, without prior written permission by DRU. A copy of the CE test certificate can be downloaded.

Product:	Gas-fired heating appliance
Type:	Maestro 80/2 RCH, Maestro 80/3 RCH
Conformity assessment agency:	Kiwa 0063
EC regulations:	2016/426/EU
EC directives:	2014/35/EU, 2014/30/EU
Applied harmonized standards:	NEN-EN-613, NEN-EN-613/A1, EN60335-1:2012, EN60335-2-102:2016, EN55014-1:2007, EN55014-2:2015, EN61000-3-2:2014, EN61000-3-3:2013

3. SAFETY

3.1 General

!Caution

- Observe the generally applicable regulations and precautions/safety instructions in this manual.
- First check – in appendix 2, table 2 – whether the appliance to be installed has the correct technical version.
- Read the manual carefully to ensure a proper and safe installation of the appliance.
- Observe the regulations/instructions in this manual.

3.2 Regulations

Please install the appliance in accordance with the applicable national, local and constructional (installation) regulations.

3.3 Precautions / safety instructions at installation

Carefully observe the following precautions/safety regulations:

➢ The appliance may only be installed and maintained by recognised installers who are skilled in the field of gas heating and electricity.

➢ Do not make any changes to the appliance.

➢ When installing a built-in appliance:

- Use non combustible and heat-resistant materials for the chimney breast, including the top of the chimney breast, the material in the chimney breast and the back wall against which the appliance will be placed. For this you can use both sheet material and stone-like materials.
- Take sufficient measures to prevent temperature of a wall behind the chimney breast becoming too high, including the materials and/or objects behind the wall.
- Comply with the minimum required internal sizes of the chimney breast.
- Vent the chimney breast by means of ventilation holes with a combined passage as stated further down in the text.
- Use heat-resistant electrical wiring.
- Place heat-resistant electrical wiring away from the appliance and as low as possible in the chimney breast. This has to do with the temperature development in the chimney breast.

➢ Only use the flue gas discharge / combustion air supply system supplied by DRU.

➢ When installing a free-standing appliance: place the appliance away from the back wall by the minimum distance stated further down in the text.

➢ Do not cover the appliance and/or do not wrap it in an insulation blanket or any other material.

➢ Keep combustible objects and/or materials outside the appliance's radiation range. This radiation range is 500 mm, unless stated otherwise.

➢ Only use the accompanying set, such as the wood or pebble set, and place it exactly as described.

➢ Leave space around the ionisation pin and spark electrode and never place glow material around these pins.

➢ Make sure there is no dirt in gas pipes and connections.

➢ Place a gas tap in accordance with applicable regulations.

➢ Prior to putting into operation, check the complete installation for gastightness.

➢ Prevent blocking of the explosion hatch(es) at the top and/or bottom of the appliance and check whether it/they connect(s) properly to the sealing surface before the appliance is built in.

➢ Do not ignite the appliance before the gas, discharge and electric connections have been fully installed, first observe the procedure described in chapter 7.3.

➢ Do not use the appliance when a pane is broken and/or cracked, until it has been replaced.

➢ The appliance was designed for atmospheric and heating purposes. This means that all visible surfaces, including the glass pane, can become hotter than 100C°. It is recommended to always place a protective grating in front of the appliance when there are children, elderly people or handicapped persons in the same room as the appliance. If it is possible that vulnerable people are regularly present in the room with no supervision, a fixed guard should be mounted around the appliance.

3.4 Principle of ignition cycle

Below you will find a brief description of how this appliance is ignited. The receiver in the appliance will get a signal from the remote control to start the ignition process. The receiver will get the signal to start the ignition process. This signal is passed on to the burner device, after which, if applicable, the relay for the Powervent System® is switched. After an 8 second interval, the ignition on the spark electrodes will start. If no Powervent System® is connected, only the relay will switch and the ignition will start immediately. The main burner will be ignited at about 50% of its capacity. This will prevent a larger amount of gas in the combustion chamber, if no ignition takes place. When the gas ignites, ionization will have to be detected. In order to make sure the flame has passed over, this will take place at the other side of the burner. When ionization is detected, the gas control will modulate to 100%.

In case of an appliance with a switchable second burner, the second valve is switched (you will be able to hear a 'click') in order to ignite the second burner. After ignition of the second burner, the appliance will always go to the full position (full capacity). This will guarantee that the second burner will actually ignite. The second burner can be switched on and off manually, by means of the remote control. In case of switching on manually, the appliance will first return to full load.

!Caution The appliance's control unit is characterized by stringent safety requirements. It is possible that the burning appliance switches off automatically and then switches back on again. This is not a failure, but a check.
The moment the appliance's control unit is connected to mains voltage, the control unit will perform this check every 24 hours. If the appliance is burning at that time, the appliance will extinguish and then start again immediately.
If you wish to prevent this, you can remove the plug and insert it again at a time during the 24 hours when the appliance is never or hardly ever burning.

4. Removing the packaging

Note the following items when removing the packaging:

- ➢ Remove all packaging materials.
- ➢ Remove all supplied components in, on and/or at the appliance.
- ➢ Check the appliance and accessories for damages (during transport).
- ➢ If necessary, contact your supplier.
- ➢ Never install if an appliance is damaged!
- ➢ Remove any screws that are used to fix the appliance to a platform or pallet.

!Caution The glass pane(s) is/are made of a ceramic material. Very small irregularities in the glass panes cannot be avoided, but are within the required quality standards.

!Caution Keep plastic bags away from children.

Appendix 2, table 1 indicates which components should be available after unpackaging.

- ➢ Contact the supplier if you find that not all components have been supplied.
- ➢ Packaging must be disposed of in accordance with the regulations.

5. Installation

5.1 Type of gas

The data plate indicates for which type of gas, gas pressure and for which country this appliance is intended.
The data plate can be found on the appliance or can be attached to a chain to which it should remain attached.

!Caution Check whether the appliance is suitable for the type of gas and gas pressure used at the location.

5.1.1 Reconstruction to different type of gas

In order to convert this appliance to a different type of gas, please contact DRU's service department and ask for the possibilities.

5.2 Gas connection

Place a gas tap in the gas pipe in accordance with the applicable regulations.
The gas connection on the gas control is located next to the receiver (see Appendix 3, fig. 38 (G)).

!Caution
- Make sure there is no dirt in the gas pipes and connections.
- No soldering may take place at the flexible gas hose(s), as this could cause leaks.

The following requirements apply to the gas connection:
- Use a gas pipe with the correct dimensions, so that no pressure loss can occur.
- The gas tap must be approved (in the EU this will be the CE mark).
- You should always be able to reach the gas tap.

5.3 Electric connection

In case of a 230 Volt electrical connection, provide proper grounding. Place this electrical connection away from the appliance, as low as possible in the chimney breast. This has to do with the temperature development in the chimney breast.

!Caution Make sure that it is easy to disconnect the appliance from the power supply after installation;
- by disconnecting the plug;
- or by means of a 2-core switch installed by a recognised installer in accordance with current regulations.

!Caution
- Protect the gas control and electric components, hereafter referred to as the gas control, against building dust and moisture!
- For connecting the receiver and control panel at an appliance equipped with the CM system®, you must observe the instructions in the supplied manual.

5.3.1 Connecting the switch contact (if applicable)

It is possible to operate one or more lamps (in case of several lamps, a maximum of 0.5A/250VAC/30VDC) via the remote control of the appliance. You could think of the lamps of Dru's lux elements. For this, you can use switch contact B on the receiver (see appendix 3, fig 36). The switch contact is not polar sensitive.

5.3.2 Connection extra power supply (max. 80W, 230VAC) (if applicable)

This connection is ideal for possible lighting or a ventilation system in the chimney breast and can be operated by means of the remote control (see appendix 3, fig. 36 (C)). The power supply of this connection is identical to the mains voltage and it can be subjected to a maximum load of 80 Watts.

5.4 Placing the appliance

!Caution
- Place the appliance in front of a heat-resistant and non combustible wall. The wall brackets on a built-in appliance ensure that the minimum distance to the wall is maintained.
- Ensure there are no combustible objects or materials present in the fire's radiation range, within a distance of 500 mm, unless indicated otherwise.
- Place the concentric system in such a way that no fire hazard is ever created (also see section 5.8).
- Take sufficient measures to prevent temperature of a wall behind the chimney breast becoming too high, including the materials and/or objects behind the wall.
- Do not cover the appliance and/or do not wrap it in an insulation blanket or any other material.
- Make sure that the appliance to be installed has a stable position. Fasten possible extending legs with the self-tapping screws.

!Caution When installing a built-in appliance, always take the following into account:
- The minimum construction measurements according to Appendix 3, Fig. 1 and 2.
- The construction height of the appliance.

➢ Provide a gas connection at the location. For details, see section 5.2.
➢ Make a passage for the concentric system; for details, see section 5.8.3.

!Caution Additional instructions for the appliance to be installed can be found from section 5.10.

5.5 Placing a built-in appliance (if applicable)

Not all built in DRU appliances are supplied with a control hatch.

!Caution Built in appliances must be installed with the DRU control hatch. This is necessary to ensure a durable, safe and proper operation. The DRU control hatch can be ordered separately. Exceptions are:
Appliances with supplied DRU guard cabinet. The DRU guard cabinet is intended for installation with a suspended platform. If the appliance will be connected to the DRU PowerVent system, the DRU control hatch has to be used after all.

The gas control is mounted to the appliance. It must be taken out and placed in the control hatch at a later time. For placing the gas control in the control hatch, see section 5.7.

Proceed as follows:
➢ Loosen the bracket with the gas control by loosening the self-tapping screws and screw the self-tapping screws back in the appliance.
➢ Place the bracket with gas control, together with the wiring of the ignition/ionisation cable(s), the flexible gas hose(s) and type plate with chain in the direction of the control hatch.

!Caution The data plate should remain connected to the chain.

➢ Set the height of the appliance using the adjustable feet.
➢ Make the appliance level at the same time.

!Tip The construction frame can be adjusted afterwards for most 2- or 3 sided appliances. This allows a good contact of the construction frame with the chimney breast. Adjustment should take place before the appliance is built in. After building in, adjustment is no longer possible. For 2- or 3-sided appliances that cannot be adjusted, we refer to section 5.10 'Additional instructions'.

!Caution Do not ignite the appliance before the gas, discharge and electric connections have been fully installed, first observe the procedure described in chapter 7.3.

5.6 Placing the chimney breast (if applicable)

For a good heat discharge and operation of the appliance, there should be sufficient space around the appliance. The chimney breast should be ventilated sufficiently by means of ventilation holes (incoming and outgoing).

!Caution When an appliance is built in the floor, please take into account the minimum distances from a combustible floor. If applicable, additional information about this is provided from section 5.10 'Additional instructions'.

!Caution
- Use non combustible and heat-resistant materials for the chimney breast including the top of the chimney breast, the material in the chimney breast and the back wall of the chimney breast.
- The appliance is not a support structure. Make sure the appliance does not have to bear the weight of the chimney breast for example.
- The passage of the ventilation holes (outgoing), which are placed as high as possible, is stated in Appendix 2, Table 2.
- If no control hatch is placed in the chimney breast, an air supply of at least 80 cm^2 should be attached as low as possible. If there is, the control hatch will suffice as air supply.

!Caution When placing the chimney breast, you should take the following into account (see Appendix 3, Fig. 2):
- The location for the control hatch: this must be placed as low as possible.
- The dimensions of the control hatch; see Placing the control hatch section 5.7.
- The location of the ventilation holes (V) (outgoing).
- Maintain a minimum 30 cm distance between the top of the ventilation hole (outgoing) and the ceiling of the house.
- The measurements of the glass pane, so that it can be placed/removed after placing the chimney breast.
- The protection of the gas control and the pipes against cement and plaster.
- If possible, you should place decorative strips, frames, etc., after any required structural work has been completed. Prevent the use of painter's tape. If this is not possible: use a good quality painter's tape and remove it immediately after plastering or painting work.

!Tip You should preferably apply the ventilation holes (outgoing) on both sides of the chimney breast. Use the DRU ventilation elements.

Check the following issues, before the chimney breast is fully closed:
- Whether the discharge / concentric system is placed correctly.
- Whether the channels, fixing brackets and possible clip bindings, which cannot be reached after installation, are fastened by means of self-tapping screws.

➢ Do not plaster on or over the edges of the construction frame, because:
- The heat of the appliance could cause cracks.
- It will no longer be possible to remove/place the glass pane.

➢ When using stone-like materials and/or plaster finishing, allow the chimney breast to dry for at least six weeks prior to taking the appliance into operation in order to prevent cracks.

5.7 Placing the control hatch (if applicable)

The control hatch (also see paragraphs 5.5 and 5.6) is placed as low as possible in the chimney breast.

!Caution
- The bottom of the control hatch may not be placed higher in the appliance than the burner surface.
- Place control hatch and bracket with gas control indoors in a dry place only!

A number of components are placed in the control hatch, such as data plate, gas control and, if applicable, the components belonging to the DRU Powervent System®.
Place the control hatch as follows, see Appendix 3, Fig. 3 for details:

➢ Make an opening in the chimney breast, as described in the manual for the control hatch.

!Tip The opening in the chimney breast may be made horizontal and vertical.

➢ Place the inner frame (A); unscrew bolts (D and F) for this.

!Caution The inner frame should be placed in the correct way. Two positions are possible. Placing the inner frame with a rotation of 180° is not allowed (see Appendix 3, fig. 4).

!Tip
- When the chimney breast is made of bricks, the inner frame can be built with bricks at the same time.
- In case of a different material, the inner frame can be glued or fastened with four countersunk screws.

➢ Remove the bracket with the gas control (B) from the appliance and place these self-tapping screws back in the appliance.

➢ Attach the bracket with gas control to the inner frame (A). Proceed as follows:
- Unwind the cables. This will, amongst other things, prevent a poor operation of the ignition.
- Unwind the flexible gas pipe(s).
- Mount the bracket with the gas control to the inner frame (A). The slotted hole falls in allen screw (C); the hole at the bottom falls over the head of allen screw (D).
- Fix the bracket with allen screw (C).

!Caution
- Avoid kinks in the pipes.
- Do not lay the cables of the ionisation and ignition pins along metal parts, wiring and other components.

➢ Connect the gas pipe with gas tap (see section 5.2).
➢ Bleed the gas pipe.

!Tip If the gas tap is closed, the bracket with gas control can be easily removed by loosening the clamp coupling under the gas control and loosening the allen screw (C) by a few turns. The bracket with the gas control can now be lifted and removed towards the front out of the control hatch.

➢ Connect the 230V mains voltage with protective earth using the correct type of plug. The other side of the power cable can be easily connected to the universal 230V plug in the control hatch. Use this universal 230V plug to disconnect the appliance from the power supply, if necessary.

!Caution If the 230V power cable is damaged, replace it by a similar power cable or a power cable that is available from your dealer.

➢ Place the data plate in its intended clamp (G).
➢ Mount the outer frame with door (E) to the inner frame using two allen screws (D and F).

!Tip The outer frame can be placed in such a way that the door turns to the left or right.

!Caution Always close the control hatch with the lock (H) because of the electricity behind the door (230V).
You can operate the lock with a fitting flat object.

5.8 Concentric system

5.8.1 General

The appliance is connected to a flue gas discharge / combustion air supply system delivered by DRU, hereafter referred to as the concentric system. The diameter for this connection is indicated in appendix 2, table 2. The passage to the outside can be created with a wall terminal (C11) or a roof terminal (C31). If necessary, an existing chimney can be used (see section 5.8.4).

!Caution

- Only use the concentric system supplied by DRU. This system has been tested in combination with the appliance. DRU cannot guarantee a proper and safe operation of other systems and does not accept any responsibility or liability for this.
- Use a chimney set for the connection to the chimney, DRU will be able to supply it.
- DRU's concentric system is intended for indoor use and may therefore not be used outdoors, with the exception of the sections intended for that purpose such as roof and wall terminals.

The concentric system is constructed from (the flue spigot of) the appliance.
If, due to constructional circumstances, the concentric system is placed first, it is possible to connect the appliance by means of a telescopic pipe piece.

5.8.2 Construction of the concentric system

Depending on the configuration of the concentric system, the appliance must be further adjusted with a possible restrictor slide and/or air inlet guide.
See Tables 4 and 6 for determining the correct adjustment and section 'Adjustment of the appliance' for the method of working.

The concentric system with wall or roof terminal has to comply with the following conditions:

- In appendix 2, table 4 or 5 you can find whether a concentric pipe should be connected and what the minimum vertical length would have to be.
- Determine the permissibility of the required configuration.

When using a **wall terminal (C11)** the following applies:

- The total vertical pipe length, when using a wall terminal, may have a maximum length that can be found in appendix 2, table 4.
- The minimum vertical pipe length, when using a wall terminal, can be found in appendix 2, table 4.
- The total horizontal pipe length, when using a wall terminal, may have a maximum length that can be found in appendix 2, table 4 (excluding wall terminal; see appendix 3, fig. 5).

When using a **roof terminal (C31)** the following applies:

- The construction of the chosen system, when using a roof terminal, must be permissible according to Appendix 2, Table 5 (See the method of working described below).

The working method below indicates how the permissibility is determined of a concentric system when using a roof terminal.

1) Count the number of 45° and 90° bends required (15° and 30° bends are also allowed).
2) Count the total number of whole metres of horizontal pipe length.
3) Count the total number of metres of vertical and/or sloping pipe length (roof terminal excluded).
4) In the first 2 columns of Table 5, look for the number of bends required and the total horizontal pipe length.
5) In the top row of Table 5, look for the required total vertical and/or sloping pipe length.
6) A box with a letter means that the chosen concentric system is permitted.
7) Use Table 6 to determine how the appliance should be adjusted.

5.8.3 Placing the concentric system

!Caution
- Maintain a distance of at least 50 mm between the outside of the concentric system and the walls and/or the ceiling (see section 5.4). If the system is built in (for instance) a cove, it should be made with non combustible, heat-resistant material all around it.
- Use heat-resistant insulation material when passing through combustible material.
- Create a terminal for the concentric system with the following diameters:
  - The pipe diameter +25 mm for a passage through non combustible material (see Appendix 3, fig. 40).
  - The pipe diameter +200 mm for a passage through combustible material. Insulate the surrounding free space with at least 60 mm mineral wool (see Appendix 3, fig. 41).
- The rosette of the wall terminal is too small to seal the opening in case of passage through combustible material. That is why a heat-resistant intermediate plate of sufficient size should first be mounted to the wall. Then, the rosette is mounted on the intermediate sheet.

The roof terminal can end in a sloping and a flat roof.
The roof terminal can be supplied with an adhesive plate for a flat roof or with a universally adjustable tile for a sloping roof.

!Caution Some heat-resistant insulation materials contain volatile components that will spread an unpleasant smell for a prolonged time; these are not suitable.

Place the concentric system as follows:

➢ Build the system up from (the flue spigot of) the appliance.
➢ Connect the concentric pipe pieces and, if necessary, the bend(s).
➢ On each connection, apply a clip binding with silicon sealing ring.
➢ Use a self-tapping screw to fix the clip binding to the pipe on locations that cannot be reached after installation.
➢ Attach the concentric system with sufficient fastening brackets, so that the weight is not resting on the appliance.
Observe the following;
- Place the first fastening bracket 0.5 metre from the appliance, at the most.
- Place a fastening bracket maximum 0.1 metre from each bend, if the bends are more than 0.25 metre away from each other. If two bends are closer to one another than 0.25 metre, 1 fastening bracket between these bends will be sufficient.
- At least every 1 metre, place a fastening bracket at slanted and horizontal sections.
- At least every 2 metres, place a fastening bracket at vertical sections.

➢ Fasten a roof terminal with anchor cables, if it protrudes more than 1,5 metres above the terminal.
➢ Determine the remaining length for the wall or roof terminal and cut it to size, make sure the correct insertion length is maintained.
➢ Place the wall terminal with the (groove/folded) seam at the top.
➢ Attach the wall terminal from the outside by means of four screws.

!Caution When using the wall terminal, place the terminal with a downward slope of 1 cm / metre towards the outside, in order to prevent rain water from raining in.

5.9 Connection to an existing chimney (C91)

The appliance can be connected to an existing chimney. A 100 mm diameter flexible SS pipe is placed in the chimney for discharging flue gases. The surrounding space is used as combustion air supply.

In case of an appliance connection of ø200/130, 0.8 metres of concentric system must first be connected vertically. Reduce the concentric system after the first 0.8 metres to a diameter of 150/100. The concentric system of 150/100 can be vertically connected to an existing chimney.

The following requirements apply when connecting to an existing chimney:
- Only allowed when used in combination with the special DRU chimney set. The installation regulation is parat of the delivery.
- The internal size should be at least 150 x 150 mm.
- The vertical length has a maximum of 12 meters.
- The total horizontal pipe length may have a maximum length that can be found in appendix 2, table 4.
- The existing chimney should be clean.
- The existing chimney should be tight.

For setting the appliance, the same conditions/instructions apply as for the concentric system described above.

5.10 Additional instructions

Attach the appliance to the wall using wall brackets (A) (see appendix 3, fig. 1).

!Tip Extension legs are available for this appliance.

5.11 Suspended placement of appliance

This appliance can be suspended from the wall:

➢ Determine the location and height of the appliance (see appendix 3, fig. 1 and 2a).

➢ Attach the wall bracket (B) to the wall using the supplied key bolts.

!Caution Attach the appliance to a vertical wall of solid, non combustible and heat-resistant material.

➢ Use the slot holes of the wall brackets for levelling.

➢ Unscrew the 2 adjustable feet (C) with lock nut from under the appliance and place them in the rear of the appliance.

➢ Place the appliance in the wall bracket. Wall bracket (A) hooks into wall bracket (B).

➢ Use the adjustable feet (C) to level the appliance vertically and lock them with the nut.

5.12 Additional installation options

The appliance must be placed with a platform. This can be done in combination with a lower decorative strip or connecting to the glass. The accompanying chimney breast can be used with or without a false wall (see appendix 3, fig. 2b and 2c). It is also possible to have the rear wall of the appliance continue to the outside. In that case, the chimney breast or other heat-resistant materials can be placed up to the side pane(s) (see appendix 3, fig. 2d (E)).

!Caution
- Use non combustible and heat-resistant material.
- Do not allow the weight of the platform to rest on the appliance, use the assembly set instead. It can be ordered separately.

5.12.1 Platform combined with lower decorative strip (see appendix 3, fig. 2b and 2c (B)):

➢ Create a recess in the platform, in which the appliance will be placed. If a false wall (D) is used, the recess will be less deep.

➢ Mutually adjust the height of the appliance and assembly set, so that the top side of the platform connects to the bottom side of the lower decorative strip.

5.12.2 Platform connecting to the glass (see appendix 3, fig. 2b and 2c (A)):

➢ Create a recess in the platform, in which the appliance will be placed. If a false wall is used, the recess (D) will be less deep. Maximum material thickness is 30 mm:

➢ Remove the lower decorative strip (see appendix 3, fig. 2e (A)) by sliding it forwards and taking it out. It will not be placed back.

➢ Remove the centring cam at the bottom of the decorative strip by cutting into it at the front and breaking it off. Make sure the bottom side of the decorative strip remains flat and resistant to corrosion.

➢ Loosen the nuts (B) of the adjustable profiles (C) by a few turns and adjust the profiles to the correct height. The height depends on the material thickness of the platform. For material thickness 20 mm and 30 mm, indicators have been applied (D). Re-tighten the nuts (B).

➢ Mutually adjust the height of the appliance and assembly set, so that the bottom side of the platform connects to the adjustable profiles.

!Caution
- Do not allow the weight of the platform to rest on the appliance and/or the adjustable profile;
- make sure there is sufficient space between the platform and the springy glass pane strip in order to be able to remove/place the front glass pane. Use the end stops on both sides of the appliance.

5.12.3 Rear wall on the glass of the side pane (see appendix 3, fig. 2d and 2e):

When installing the wall up to the side pane, as shown in situation E, proceed as follows:

➢ Observe the measurements for the wall (G) as indicated in the figure.

➢ Loosen the self-tapping screws (B) of the vertical decorative strip (C) by a few turns and adjust the profiles to the correct distance. The distance depends on the thickness of the wall. For material thickness 20 mm and 30 mm, indicators have been applied (D). The cover plate (I) is no longer required and can be removed. Re-tighten the self-tapping screws (B).

➢ Maintain a 5 mm distance between the wall (G) and the side pane.

!Caution
- In case of a 2-sided appliance, the side pane can only be placed on the glass of the side pane at the rear wall side, not at the side wall side (F). It has to be possible to remove the front glass pane. For this purpose, it should be possible to remove the decorative strip.
- In case of materials up to the glass, it is important to maintain a 5 mm minimum distance from the glass.
- In case of materials up to the glass, heat-resistant material should be used that is at least able to resist a temperature of 85°C!

5.13 Mantel iron

If the chimney breast is made of stone-like material, it is necessary to place a mantel iron. A mantel iron must be placed to prevent that the appliance has to carry the weight of the stone-like materials that were used to build the chimney breast (masonry chimney breast).

When installing the mantel iron, proceed as follows (see appendix 3, fig. 2f):

➢ Cut the mantel iron to the correct size.
➢ Position the mantel iron.
!Caution Do not allow the mantel iron to rest on the construction frame.
➢ Attach the threaded rod(s) in the nut(s) on the corner(s) of the mantel iron (A).
!Caution Adjust the threaded rod(s) with tensioning nut(s) (B) so that there is sufficient room for adjustment.
➢ Determine the height of the eye(s) (C).
➢ Attach the eye(s) to the wall using the key bolt(s);
➢ Attach the hook(s) (D) of the threaded rod(s) to the eye(s).
➢ Level it all, using the tensioning nut(s).

5.14 Glass panes

After placement of the wood set (see section 5.16), it is possible to place the glass panes:

!Caution
- Avoid damaging the glass panes during removal/placing.
- use the socket spanner supplied for loosening/tightening the self-tapping screws.
- if applicable, use the supplied Allen key for loosening / fastening the Allen screws.
- avoid/remove fingerprints on the glass panes, as they will burn into the glass.

5.14.1 Removing the front glass pane

For removing the front glass pane, please observe the following steps.

Appliance with glass on 3 sides (see appendix 3, fig. 6):

➢ Slide (if applicable) the lower decorative strip (A) towards the front. It is not necessary to remove it.
➢ Remove the lock bolts from the springy glass pane strip at the top (1).
➢ Take the springy glass pane strip (2) at its handles and place it on the higher brackets.
➢ Grab the glass pane at both sides, tilt the top of the glass pane a little away from the appliance and lift up the glass pane at an angle (3).
➢ Tilt the bottom of the glass pane away from the appliance and remove the glass pane (4).
!Caution Prevent the glass pane from getting damaged.

Appliance with glass on 2 sides (see appendix 3, fig. 7):

➢ Slide (if applicable) the lower decorative strip (A) towards the front. It is not necessary to remove it.
➢ Grab the vertical decorative strip (C) at the top, tilt the vertical decorative strip and remove it.
➢ Unscrew the self-tapping screws from the vertical glass strip (D) and remove the vertical glass strip.
➢ Remove the lock bolts from the springy glass pane strip at the top (1).
➢ Take the springy glass pane strip (2) at its handles and place it on the higher brackets.
➢ Place the suction cup (E) on the front pane on the closed side of the appliance.
➢ Grab the pane at the suction cup and side and slightly tilt the top towards you.
➢ Lift the glass pane and move it towards the side.
!Caution Prevent the glass pane from getting damaged.
➢ Tilt the bottom of the glass pane towards the front and remove the glass pane.

5.14.2 Placing the glass pane

Placing the glass pane will take place in reverse order of removing the glass pane, as described above:

!Caution
- Avoid/remove fingerprints on the pane, as they will burn into the glass.
- do not screw the self-tapping screws too tight, to prevent breaking and/or slipping.
- place the glass pane with the logo in the bottom right corner.

!Caution
- Make sure the front glass pane makes full contact with the side pane (there may be no opening between the side pane and front pane).
- Make sure the groove of the springy glass pane strip in which the glass pane is placed, is free from dirt prior to placing the glass pane.

5.15 Setting the appliance

The appliance has to be set in such a way that it works correctly in combination with the concentric system. For that purpose, a restrictor slide is placed, the middle plate in the top is removed and/or the air inlet guide is removed. The conditions for application with wall terminal and roof terminal are stated in appendix 2, tables 4, 5 and 6. If applicable, section 5.15.3 explains how this appliance should be adjusted for PowerVent®.

5.15.1 Restrictor slide (R) and Flue gas distribution plate (T)

The restrictor slide (R) is supplied separately. It is mounted as follows (see Appendix 3, Fig. 8):

➢ Unscrew the 4 self-tapping screws (S) from the flue gas distribution plate (T).
➢ Remove this plate.
➢ Unscrew the 2 pre-mounted self-tapping screws (U) from the appliance.
➢ Place the restrictor slide (R) with the 2 self-tapping screws (U). The restrictor slide (R) falls over part of the exhaust pipe hole, do not tighten the self-tapping screws (U).

!Caution When fastening, the arrow on the restrictor slide should point away from you.

➢ Adjust the position of the restrictor slide (R) using situations C and D in appendix 2, table 6. The letter of the position on the restrictor slide corresponds with the letter of the situation in table 6.
➢ Make sure that the point of the triangle belonging to the position that you want and the centre of the self-tapping screw are exactly aligned.
➢ Tighten the 2 self-tapping screws (U).

!Caution If prescribed by the situation, place back the flue gas distribution plate (T).

5.15.2 Air inlet guide (L)

The air inlet guide is supplied separately. In order to place it, you must remove the middle vermiculite plate. For placing the air inlet guide, proceed as follows:

➢ Unscrew the self-tapping screws from the middle vermiculite plate (see appendix 3, fig. 9a (B)) and remove them.
➢ Unscrew the pre-mounted self-tapping screws (S).
➢ Place the air inlet guide (L) in accordance with the figure and fasten it with the self-tapping screws (S).
➢ Screw back the middle vermiculite plate (B).

5.15.3 PowerVent® (if applicable)

This appliance is suitable for PowerVent®. Before consulting the installation manual for the PowerVent®, the following adjustments should be made (see appendix 3, fig. 9b):

➢ Unscrew the self-tapping screws from plates K, G, I and J and remove these plates from the appliance. Lift plates K and J by approximately 1 centimetre and slide them out of the appliance from underneath the standing burners.
➢ Unscrew the self-tapping screws (S) from the partitions (Y) and remove them. Screw back the self-tapping screws (S) in the combustion chamber.
➢ Check whether more work should be performed below plates K, G, I and J. If not, place back these plates and fasten them with the self-tapping screws.
➢ For more information, please consult the PowerVent installation manual

5.16 Placing the wood set

The appliance is supplied with a wood set.

!Caution The figures do not always show the correct colours.

!Caution Observe the instructions below to prevent unsafe situations:

- Only ever use the supplied wood set.
- Place the wood set exactly as described.
- Make sure the ionization and ignition electrodes and the surrounding space remain free (see appendix 3, fig. 18 and 19).
- make sure there is no vermiculite dust on the burner.

!Caution Place the logs exactly as described, otherwise:

- the main burner will not ignite properly; which could result in unsafe situations.
- the appliance will become filthy more quickly, as a result of soot.
- the flame picture is affected.

5.16.1 Wood set

The wood set consists of a number of logs (see appendix 3, fig. 11), vermiculite (see appendix 3, fig. 12), chips (see appendix 3, fig. 13), glow material (see appendix 3, fig. 14) and ash (see appendix 3, fig. 15).

➢ Fill the V-shaped burner with vermiculite; evenly spread the vermiculite (see appendix 3, fig. 16). The vermiculite may not get higher than the edge of the burner.

!Tip You can influence the flame picture by moving the vermiculite,

!Caution

- The vermiculite may not get higher than the edge of the burner.
- The burner deck has to remain covered with vermiculite in order to prevent reduction of the burner's life span.

➢ Identify logs A to G (see appendix 3, fig. 11).

!Tip Use the burn stains on the logs for identification.

➢ Place log A on top of the V-shaped burner in the position cams, the log may not cover the burner pattern (see appendix 3, fig. 16).

➢ Place log B over the left standing burner.

➢ Place log C against the tube of the left standing burner and in the position cam.

➢ Fill the vermiculite plates with chips, spread the chips evenly. Keep the front free from chips, so that no chips can get under the glass pane when the glass pane is closed.
Keep a section to the left free for placing log D (see appendix 3, fig. 16).

!Caution The vermiculite plates are provided wit square holes, these holes supply air. Do not place more than one layer of chips over these holes.

➢ Place log D on the position cam to the left and on log A to the right (see appendix 3, fig. 17a for G20/G25/G25.3 and fig. 17b for G31).

➢ Place log E on the position cam to the right and on log A to the left, make sure there is 1 centimetre play between log E and the standing burner to the right.

➢ Place log F over the standing burner to the right.

!Caution Make sure in case of G31 that logs B and F of the standing burners are not lying on the cams, but against the cams (see appendix 3, fig. 17b).

➢ Place log G to the left of the ignition, on the chips.

Tip! Place chips on the edge of he pane frame. Prevent chips from getting under the pane frame (see appendix 3, fig. 16).

➢ If necessary, distribute the glow material over the V-shaped burner and secure the glow material under the chips and/or wood set.

!Caution The areas around the ionization and ignition should remain free from glow material.

➢ If necessary, distribute the ash over the chips, make sure it does not end up on the burners.

6. Control

The appliance is supplied with a wireless black remote control for the user (see appendix 3, fig. 35 (B)). As an option, an orange remote control can be supplied for the installer (see appendix 3, fig. 35 (O). Controlling the flame height, igniting and switching off take place through the black remote control controlling the receiver. Some fires can also be controlled in an alternative way. These options are described further down in this chapter.
The user manual describes the operation of the appliance, including the operation of the remote control and alternative methods of operation.

!Caution

- Do not ignite the appliance before the gas, discharge and electric connections have been fully installed, first observe the procedure described in chapter 7.3.
- Chapter 6 of the manual supplied applies to an appliance equipped with the CM system.

6.1 Remote controls

6.1.1 Black remote control for the user

Proceed as follows to make the black remote control ready for use:

➢ Place the two penlite batteries (AA) in the battery holder of the remote control.
➢ Make sure the voltage of the atmospheric fire is not switched off for longer than 5 minutes.
➢ If the remote control does not have the "BND" state, the following operations must be performed: Press the menu button (button with square symbol) on the remote control for at least 10 seconds and then press a few times until “BND” appears on the screen with the receiving symbol.
➢ Press the “arrow up” and “arrow down” buttons briefly and simultaneously, so that a (flashing) warning triangle and an hourglass appear in the screen as well.
➢ As soon as logging on is finished, the start screen will appear

!Tip Ale functions are extensively explained in the supplied user manual.

6.1.2 Orange remote control for the installer

By means of the optionally available orange remote control, it is possible to read all information stored in the receiver. In this way, the last 20 error messages can be retrieved, and it will also be possible to read how many times an error occurred. Moreover, this remote control can also be used to adjust the basic settings and to read the size of the ionization flow. It is also required for a wired Domotics control.

6.2 Alternative control (if applicable)

In addition to the remote control, it is also possible to operate the fire in alternative ways. For this purpose, a Domotics system can be connected to the receiver. This can be a wired or a wireless system. The various possibilities are described below (see appendix 3, fig. 35, 36 and 37).

6.2.1 Wired

Wired connection of the Domotics system to the receiver takes place via a 0-3VDC direct current (see appendix 3, fig. 36 (D)).

!Caution A higher voltage than 3V will damage the receiver and is therefore not permitted.

Tip! In case of Domotics systems with an output voltage of 0-10V, you should switch the voltage back to 0-3VDC. Use a voltage distributor made of resistors. For example, 2200 ohms and 680 ohms. The voltage above 680 ohms resistance can be used on the input of the 0-3VDC. Low ohmic resistors must be used.

By controlling the height of the voltage, the receiver will be able to calculate the position of the fire. Table “B1” in appendix 3, fig. 37 shows the relationship between the voltage and the height of the flame. If you have an appliance with 2 burners, table “B2” will apply. It shows the relationship between the voltage, the height of the flame and the number of burners.

Proceed as follows when connecting the Domotics system to the receiver:

➢ Connect the 0-3VDC signal to the connector, to which a black and yellow wire are connected (see appendix 3, fig. 36 (D)).
➢ Use the orange remote control to select the option for a wired connection: go to position 8 in the first menu and select an appliance with single burner (option 2) or an appliance with two burners (option 3). For this, read the manual of the orange remote control.

!Caution The yellow wire is the + pole, the black wire is the - pole. Always connect '- to -' and '+ to +' .

6.2.2 Wireless

The wireless connection is divided into 2 types:

- Connection via a 'modbus' protocol.
- Control via an application.

!Caution Only 1 type of wireless connection is possible on the communication module.

6.2.2.1 Connection via 'modbus' protocol

Wireless connection of a Domotics system to the receiver is possible via a connection according to the 'modbus' protocol. Such a connection can only be established with a communication module (see Appendix 3, fig. 35 (W)). This module can be ordered from DRU. This communication module translates the 'modbus' protocol from the Domotics system into a wireless signal to the receiver.

When connecting a Domotics system via the communication module to the receiver, proceed as follows:

➢ Use the remote control to test whether the location where the communication module will be placed is within the reach of the receiver.
➢ Place the remote control on this location and test the reception sensitivity (RSSI).
➢ Press the on/off button and down arrow at the same time. The value that is now visible, must be between -20 and -70 (see User Manual, "Reception Sensitivity"). If needed, hold the remote control closer to the appliance in order to improve the reception.
➢ Connect the communication module by means of an RJ45 plug, according to the instructions in the manual that is supplied with this module.
➢ Now follow the steps described in the 'modbus' protocol manual. It is available from the supplier of the domotics system.

6.2.2.2 Control via application

Also when operating the appliance via a tablet provided with the DRU Control App (iOS or Android), you will need a communication module. This module can be ordered from DRU.

In order to control the fire via an application, proceed as follows:

➢ Using the remote control, test whether the location where you want to place the communication module is within the receiver's range.
➢ Place the remote control on this location and test the reception sensitivity (RSSI).
➢ Press the on/off button and down arrow at the same time. The value that is now visible, must be between -20 and -70 (see User Manual, "Reception Sensitivity"). If needed, hold the remote control closer to the appliance in order to improve the reception.
➢ Connect the communication module by means of an RJ45 plug, according to the instructions in the manual that is supplied with the communication module.
➢ Use the instructions for the application in order to install it.

!Caution

- The DRU Control app functions in accordance with the multicast and communication protocol. Ensure the router is equipped with this. For this, consult the router's installation manual.
- If the DRU Control app is used, the thermostat function no longer applies.

The application 'DRU Control' is available in the AppStore, at GooglePlay or our website.

7. Final inspection

In order to check whether the appliance is working properly and safely, you must perform the following inspections before the appliance is put into operation.

7.1 Gastightness

!Caution All connections must be gastight. Check the connections for gastightness.
The gas control may be subjected to a maximum pressure of 50 mbar.

7.2 Gas pressure/line-pressure

The burner pressure is set at the factory; see data plate.

!Caution The line-pressure in house installations must be checked, because it can be wrong.

➢ Check the line-pressure; see Appendix 3, Fig 38 (P1) for the measuring nipple on the gas control.
- Contact the gas company if the line-pressure is too high.
- If the line-pressure is too low, check this at the gas meter. Contact the gas company if the line-pressure is also too low at the gas meter.

7.3 Ignition main burner

For igniting the main burner, see the User Manual.

7.3.1 First ignition of the appliance after installation or adjustments.

!Caution After installation, or after work has been performed, you should ignite the appliance for the first time without the glass window. If necessary, bleed the gas pipe.

Follow the procedure described below:
➢ If necessary, remove the glass pane.
➢ Start the ignition procedure as described in the user manual.
➢ If the main burner does not ignite:
- Reset the system by pressing the buttons ‘arrow up’ and ‘arrow down’ simultaneously.
- Repeat the ignition procedure until the main burner ignites;

!Caution After each attempt to ignite, the system should be reset by means of the remote control.

➢ Consult the diagram with error messages (Appendix 1) if this does not succeed after a few attempts;

The appliance ignites at 50%. After ionization has been detected, the appliance will modulate to 100%.
This detection will have to take place within 15 seconds, or else the appliance will enter error mode.
If applicable, the second valve will switch to ignite the second burner. Here, you can hear a clear ‘click’ sound.

➢ Check whether the main burner continues to burn.
➢ If the main burner does not continue to burn:
Reset the system as described and repeat the ignition procedure until the main burner continuous to burn.

!Caution The system can be reset and re-ignited two times in a row at maximum. Then the system will enter a hard lock-out and you will have to wait half an hour, before you can make a new attempt. Never use more than 3 attempts to ignite the appliance, as this could lead to a accumulation of gas within the appliance. Make sure that there is no more gas in the appliance before making 3 new ignition attempts.

➢ Consult the malfunction search diagram (Appendix 1) if this does not happen after a few attempts.
➢ Switch off the appliance.
➢ Clean the glass pane before using it for the first time, as described in the user manual.
➢ Then mount the glass pane as described in section 5.10.
➢ Repeat the ignition procedure a few times and perform the checks described in chapter 7.3.2.
➢ From now on, the main burner should ignite smoothly.
➢ Clean the glass pane after burning for the first time, as described in the user manual.

!Tip When checking whether the main burner continuous to burn, it is possible that it switches off after 15 seconds. In that case, this will be caused by the fact that there is no ionization detection and because the glass window has not been placed. This can be regarded as a situation where the main burner continues to burn.

!Caution
- Always wait 5 minutes before re-igniting the appliance.
- No changes may be made to the gas control.

7.3.2 Main burner

!Caution
- The ignition electrode should ignite the main burner within a couple of seconds and without popping.
- The main burner(s) must cross the full burner smoothly and without popping and continue to burn.
- If the appliance does not ignite after three restarts and enters hard lockout, it may never be reset by disconnecting it from the power supply. If a restart is necessary after all: remove the glass pane and make sure the gas is able to escape from the appliance. After this, the appliance may be disconnected from the power supply for 10 seconds. After these 10 sec., the power supply may be reconnected. Ignite the appliance in the same way as the first ignition, as indicated in section 7.3.1.

➢ Check operation of the main burner from a cold condition.
➢ If sparks are determined between the ignition electrodes, the main burner should burn within a few seconds.

!Tip The flame picture and a good flame transfer can only be properly judged if the glass window is installed.

Use the malfunction search diagram (Appendix 1) if the ignition of the main burner does not comply with the above-mentioned requirements.

7.4 Flame picture

The flame picture can only really be assessed when the appliance has been burning for several hours. Volatile components from paint, materials, etc., which evaporate in the first hours, will affect the flame picture.

➢ Check whether the flame picture is acceptable.
➢ Consult the malfunction search diagram (Appendix 1) if the flame picture is not acceptable, in order to solve the problem.

8. Maintenance

Once per year, the appliance must be checked, cleaned and, if necessary, repaired by a competent installer in the field of gas heating and electricity. Check at least whether the appliance is working properly and safely.

!Caution
- Close the gas tap when performing maintenance work.
- Check the gastightness after repair.
- Make sure there is no voltage on the appliance.
- SS-absolutely do not clean the concentric system (internally) with a steel brush or metal sponge, for example. This will damage the oxide skin and could lead to leaks in the system as a result of pitting corrosion.

➢ Clean glass pane(s), if necessary.

!Caution Only clean a glass pane once it has reached room temperature.

Caution!
- Avoid damage to the glass pane(s).
- Avoid/remove fingerprints on the glass pane(s), as they will burn into the glass.
- Clean the pane(s) as described in the user manual.
- Regularly remove accumulated dirt, as it can burn into the glass.
- Do not use the appliance when a pane is broken and/or cracked, until it has been replaced as described from section 5.10.

!Caution If necessary, place back the wood or pebble set correctly; for this, see from section 5.10.

➢ Inspect the flue gas discharge system.

!Caution You must always perform a final inspection.

➢ Perform the inspection as described in chapter 7.

8.1 Parts

Components that have to be replaced are available at the supplier.

9. Delivery

You must explain to the user how to operate the appliance. You must give him/her instructions on putting it into operation, the safety measures, the operation of the remote control and the annual maintenance (see the User Manual).

!Caution
- Tell the user to close the gas tap immediately in case of malfunctions/bad performances and contact the installer in order to prevent dangerous situations.
- Chapter 9 of the manual supplied applies to an appliance equipped with the CM system.
- Indicate the location of the gas tap.
- Point out the precautions in the user manual against unintended ignition by other wireless remote controls such as car keys and garage door openers.
- Point out the 230 Volt connection.

➢ Instruct the user about the appliance and the remote control.

➢ When the appliance is taken into operation, point out that
- In order to avoid cracks in a chimney breast made of stone-like materials or finished with plaster, it should dry for at least 6 weeks prior to putting the appliance into operation.
- When the appliance is stoked up for the first time, volatile components evaporate from paint, materials, etc.. (Also first read chapter 3 of the user manual !).
- When evaporating, the appliance should preferably be set at the highest level.
- The room should be well ventilated.
- Cleaning the glass pane(s).

➢ Give the manuals to the user (all manuals should be stored near the appliance).

10. Malfunctions

Appendix 1 provides an overview of malfunctions that might occur, their possible causes and remedies.

Appendix 1 Malfunctions

Error messages			
Error code	**Problem**	**Possible cause**	**Remedy**
F01	Communication loss between receiver and burner device	Communication cable does not make contact	Make sure the connectors of the communication cable make proper contact
		Communication cable defective	Replace communication cable
F02	Receiver overheated (60° above room temperature)	Poor ventilation at receiver	Improve ventilation at receiver
		Receiver makes contact with hot parts	Move receiver in such a way that there is no more contact with hot parts
F03	Internal (receiver) NTC sensor does not work correctly	Receiver is defective	Replace the receiver
F04	External NTC sensor, does not work correctly	External NTC sensor or cabling defective.	Replace NTC sensor or replace cabling
F05	Internal safety error	Receiver is defective	Replace receiver
F06	Communication loss between transmitter and receiver	Transmitter is out of the receiver's range	Make sure the transmitter is near the receiver
		Obstacles between transmitter and receiver may interfere with the signal	Remove possible obstacles between transmitter and receiver
		Transmission power is too weak	Check transmission power (see User Manual chapter 10)
F08	No ionization	No sparks	Make sure distance between electrodes is 3-4 mm
			Replace spark electrodes
		No gas	Check whether there is gas
			When using PowerVent, check whether the gas valve opens
		Poor flame transfer main burner	Check position blocks/chips
			If necessary, remove dust from burner openings
		No good flame under ionization pin (suffocating flame)	Glass pane strips not placed correctly
			Check restriction and air inlet guide setting
			When using PowerVent, check pressure setting
		Ionization pin placed incorrectly	Place it on the right location
		Ionization pin blocked (measure ionization flow when > 0 and < 1.8 uA)	Remove any vermiculite or chips from the burner

Error messages			
Error code	**Problem**	**Possible cause**	**Remedy**
F08 (follow-up)		Ionization pin defective (measure ionization current when 0)	Replace the ionization pin
F12	ESYS is not released	ESYS is in hard-lock	Wait half hour until ESYS resets itself.
F13/F14	(ionisation <0.8 µA) Flame loss when only the main burner (F13) is on or both burners (F14) are on	Ionisation pin short-circuited	Remove chips, vermiculite or glow material lying against the ionisation pin
		Ionisation current too critical (0.8 ≤ Iionisation < 1.8 µA)	Increase ionisation current to ≥ 1.8 µA by rearranging vermiculite, and removing chips and dust from the burner openings
		Suffocation due to poor flue gas channel	Check the concentric system
			Check the setting of the appliance
		Suffocation when using PowerVent	Check the pressure setting of the PowerVent system
		24 hour check control (only in case of F13)	Reset with remote control (consult Powervent manual)
		Gas has fallen away	Check gas supply
		Gas control defective (see "A" in app. 3, fig. 38)	Replace the gas control
F15	No burner device (see "C" in appendix 3, fig. 38)	Burner device came loose from burner device	Attach the burner device
		Burner device incorrectly mounted	Mount the burner device correctly
		Pins on the connector on the gas control are bent	Bend them straight
	High limit error	High limit bridge defective	Check High limit bridge ESYS
F16	Hardware Error ESYS	ESYS defective (burner device)	Replace ESYS (burner device)
F17	Disable contact is closed	Window is open. (if this contact is present)	Close window
		A bridge has been made across the Disable contact.	Remove bridge on ESYS (burner device)

Appendix 2 Tables

Table 1: Parts included with the delivery	
Part	**Number**
Installation manual	1x
User manual	1x
Wood set	1x
Glow material	1x
Ash	1x
Restrictor slide	1x
Air inlet guide	1x
Remote control	1x
Mains lead NL and UK	1x
Control hatch	1x
Wall bracket	1x
Assembly set platform	Supplied separately
Mantel iron	Supplied separately
Back-up self-tapping screws for benefit of glass pane assembly	nx
Key bolts M8	4x
Hexagonal nut M8	4x
Washer M8	4x
Compression fitting 15 mm x G3/8"	1x
Socket spanner 8 mm	1x
Suction cup	1x (2-sided appliances only)

Table 2: Technical data					
Model identifier(s)		Maestro 80/2 RCH, Maestro 80/3 RCH			
Type of appliance		Built-in			
Combustion		Closed combustion			
Type		C11, C31, C91			
Categorie		I_{2EK}, I_{2ELL}, I_{2H}, I_{2E+}, I_{2E}, I_{3P}			
Concentric appliance connection		200/130			
Applicable concentric systems		DRU LAS ES-I 200/130, DRU LAS ES-E 200/150/100, DRU LAS ES-I 150/100, DRU LAS AG-I 150/100, DRU PV-I 100/60			
Flame protection version		Separated ignition / ionization plugs			
Atmosphere safety		No			
Explosion hatch		Yes			
Ventilation hole chimney breast		200 cm^2			
Gastype:	**Symbol**	**G25/G25.3***	**G20**	**G31**	**Unit**
Indirect heating functionality		No	No	No	
Direct heat output		8,6	9,0	7,7	kW
Indirect heat output		-	-	-	kW
Space heating emissions NO_x		111,0	118,4	115,8	mg/kWh_{input} (GCV)
Heat output					
Nominal heat output	P_{nom}	8,6	9,0	7,7	kW
Minimum heat output (indicative)	P_{min}	1,3	1,4	1,3	kW
Technical data					
Nominal heat input (Hs)		11,4	12,0	11,5	kW
Nominal heat input (Hi)		10,3	10,8	10,6	kW
Consumption max		1223	1140	416	L/h
Consumption min		209	218	84	L/h
Burner pressure max		18,7	14,7	26,8	mbar
Burner pressure min		4,2	4,7	10,4	mbar
Main burner injector		2x Ø1,65 1x Ø1,55	2x Ø1,65 1x Ø1,55	2x Ø1,10 1x Ø1,00	mm
Low setting injector		A****	A****	A****	mm
Efficiency class (EN613)		1	1	1	
Useful efficiency (NCV)**					
Useful efficiency at nominal heat output	$\eta_{th,nom}$	91,6	93,0	91,5	%
Useful efficiency at minimum heat output (indicative)	$\eta_{th,min}$	71,4	72,0	72,0	%
Auxiliary electricity consumption					
At nominal heat output	el_{max}	0,0236	0,0236	0,0236	kW
At nominal heat output	el_{min}	0,0125	0,0125	0,0125	kW
In standby mode	el_{SB}	0,0026	0,0026	0,0026	kW
Permanent pilot flame power requirement					
Pilot flame power requirement (if applicable)	P_{pilot}	-	-	-	kW
Energy efficiency					
Energy efficiency index	EEI	91	93	92	
Energy efficiency class		A	A	A	
Type of heat output / room temperature control					
Single stage heat output, no room temperature control					No
Two or more manual stages, no room temperature control					No
With mechanic thermostat room temperature control					No
With electronic room temperature control					Yes
With electronic room temperature control plus day timer					Yes
With electronic room temperature control plus week timer					Yes
Other control options					
Room temperature control, with presence detection					Yes***
Room temperature control, with open window detection					Yes***
With distance controle option					Yes

* This appliance is suitable for G25.3 with the composition according NTA 8837.
** System efficiency.
*** To be used by means of home automation.
**** Adjusting screw.

Table 3: Line-pressure when using G31				
Country	**mbar**			
NL / DK / FI / NO / SE / HU / BA / GR	30			
FR / BE / IT / PT / ES / GB / IE	37			
D	50			

Permissibility and conditions concentric system with wall terminal

Table 4: Conditions for setting the appliance					
G20/G25/G25.3/G31					
Total number of meters vertical pipe length	Total number of meters horizontal pipe length (excluding wall terminal)	See Figure	Air inlet guide	Restrictor slide	Flue gas distribution plate
[1] 0,8 - 4	0	5a	NO	NO	*YES
[1] 0,8 - 4	>0 -8	5a	NO	NO	NO
[1] 0,5 - 0,8	0 - 3	5b	NO	NO	NO
[1] [2] 0	0	5c	NO	NO	NO
[3] 0,8 - 4	0 - 1	5d	NO	NO	NO
[4] 0,8 - 4	0	5e	NO	NO	NO

* Factory settings: Air inlet guide and restrictor slide are supplied separately. The flue gas distribution plate has been mounted.

!Caution

[1] Only use 200/130 mm concentric system, including the 200/130 mm wall terminal.

[2] In case of this configuration, an unpainted stainless steel wall terminal should be used.

[3] Use the vertical length including bend of the 200/130 mm concentric system, reduce the concentric system **immediately after the bend** to 150/100 mm. Apply wall terminal of 150/100 mm (maximum 1 metre horizontal).

[4] Use the vertical length of the 200/130 mm concentric system, reduce the concentric system **immediately before the bend** to 150/100 mm. Apply bend and wall terminal of 150/100 mm (no horizontal length allowed).

Table 5: Determining permissibility concentric system with roof terminal													
G20/G25/G25.3/ G31	Total number of meters horiz. pipe length	Total no. of meters vertical and/or sloping pipe length											
		1[1])	2	3	4	5	6	7	8	9	10	11	12
no bends	0	B	B	B	C	C	C	C	C	C	D	D	D
2 bends	0	A	A	B	B	B	C	C	C	C	C	C	D
	1		A	A	B	B	B	C	C	C	C	C	
	2			A	A	B	B	B	C	C	C		
	3				A	A	B	B	B	C			
	4					A	A	B	B				
	5												
3 bends	0	A	A	A	B	B	B	C	C	C	C	C	C
	1		A	A	A	B	B	B	C	C	C	C	
	2			A	A	A	B	B	B	C	C		
	3				A	A	A	B	B	B			
	4					A	A	A	B				
	5												
4 bends	0	A	A	A	A	B	B	B	C	C	C	C	C
	1		A	A	A	A	B	B	B	C	C	C	
	2			A	A	A	A	B	B	B	C		
	3				A	A	A	A	B	B			
	4					A	A	A	A				
	5												
5 bends	-												

■ = Situation is not permissible

[1]) minimum length

Table 6: Conditions for the adjustment of the appliance with a roof terminal			
G20/G25/G25.3/G31			
Situation	Air inlet guide	Restrictor slide	Flue gas distribution plate
A	NO	NO	NO
B	YES	NO	YES
C	YES	62	YES
D	YES	42	YES

!Caution **In case of a roof terminal without bends:** first connect 0.8 metres of concentric system vertically on the appliance with a diameter of 200/130 mm. After the first 0.8 metres, reduce the concentric system to a 150/100 mm diameter, including a 150/100 mm roof terminal.

!Caution **In case of a roof terminal with bends:** first connect 0.8 metres of concentric system vertically on the appliance with a diameter of 200/130 mm. Make the concentric system with a 200/130 mm diameter, and reduce the concentric system immediately after the last bend to 150/100 mm, including 150/100 mm roof terminal.

Appendix 3 Figures

1

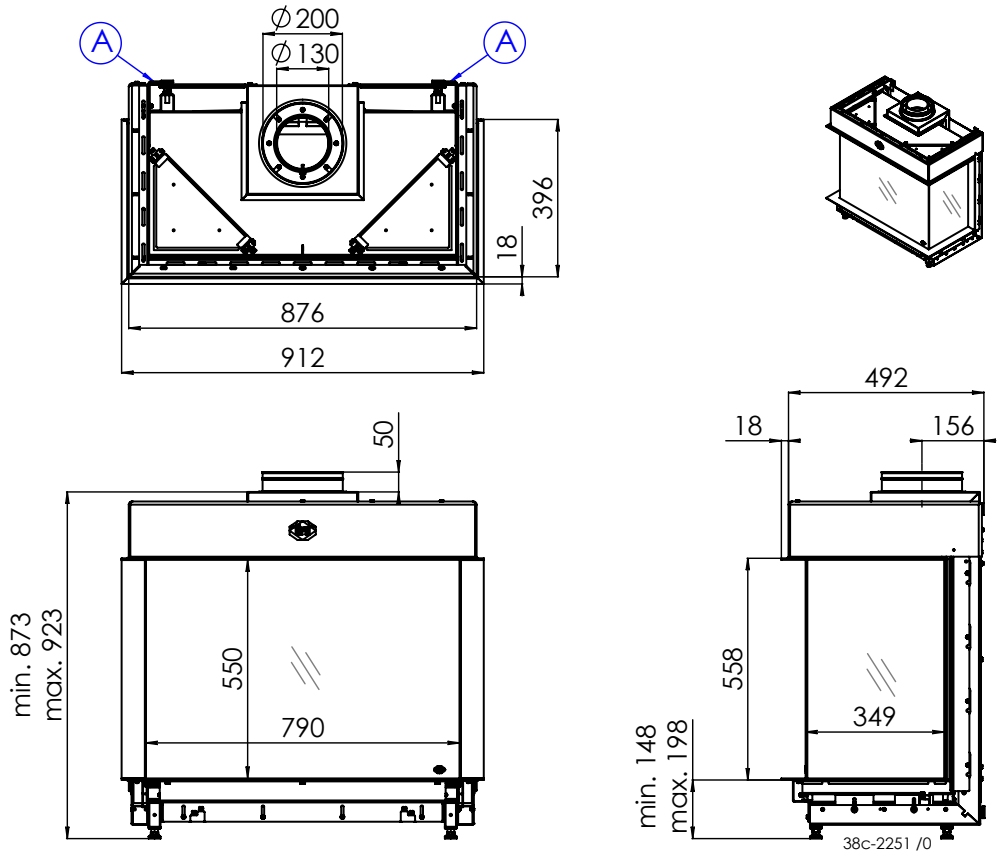

Maestro 80-3 RCH

1

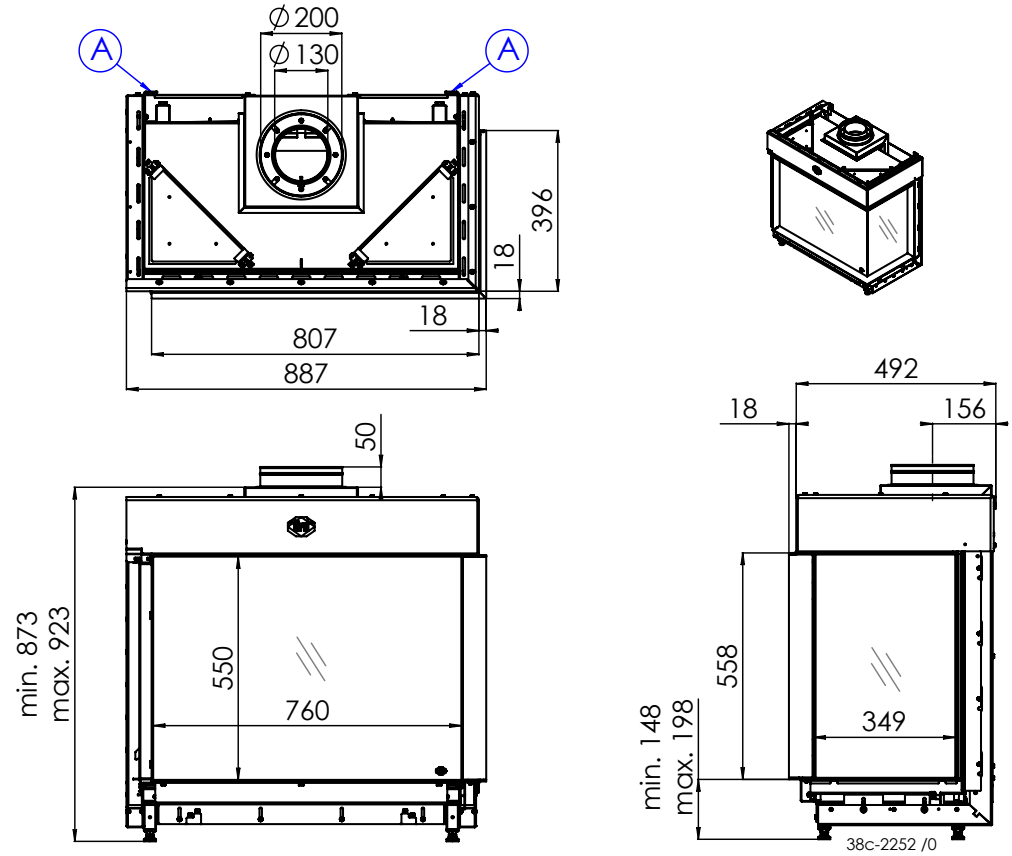

Maestro 80-2 R RCH

2

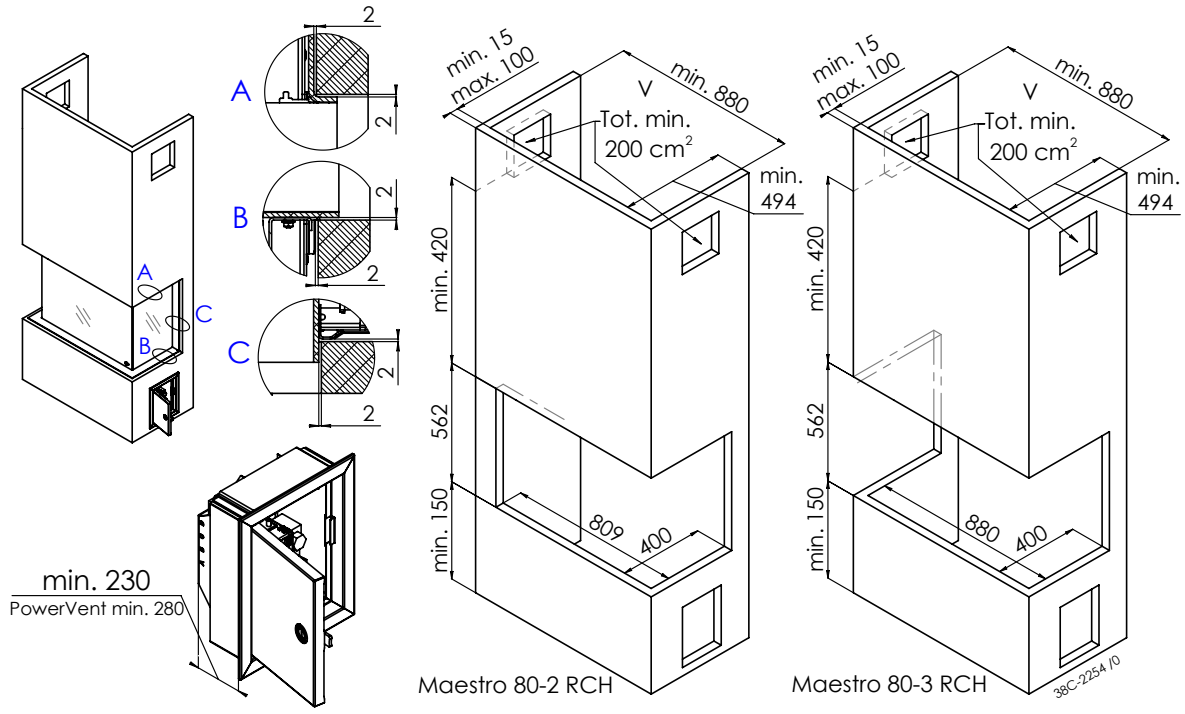
A
B
C
2
min. 230
PowerVent min. 280
min. 15
max. 100
V
Tot. min.
200 cm²
min. 880
min.
494
min. 420
562
min. 150
809
400
Maestro 80-2 RCH
880
Maestro 80-3 RCH
38C-2254 /0

2a

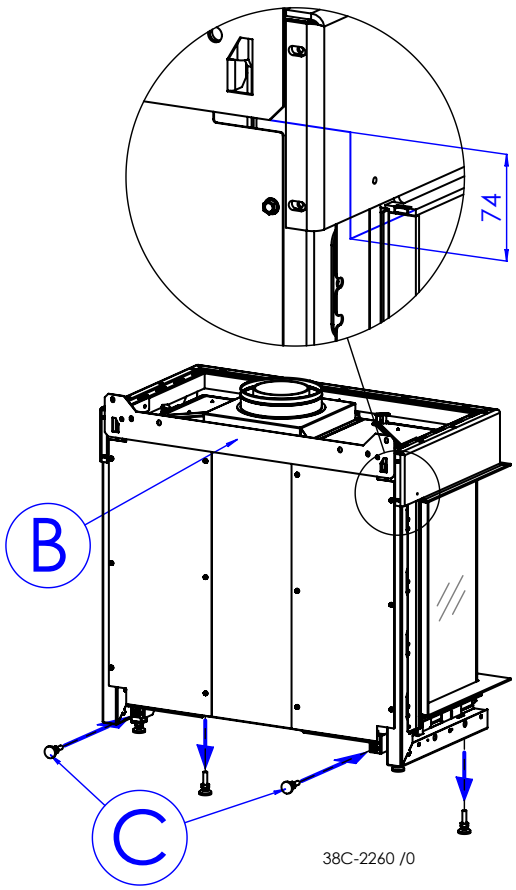
74
B
C
38C-2260 /0

2b

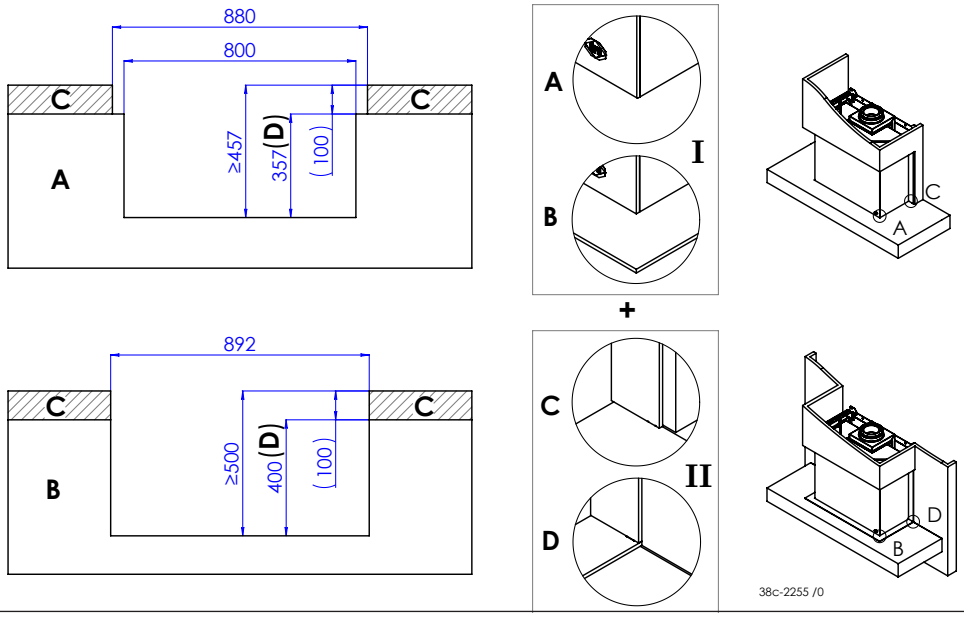
880
800
C
C
A
≥457
357
(D)
100
A
I
B
+
892
C
C
B
≥500
400
(D)
100
C
II
D
C
A
D
B
38c-2255 /0

2c

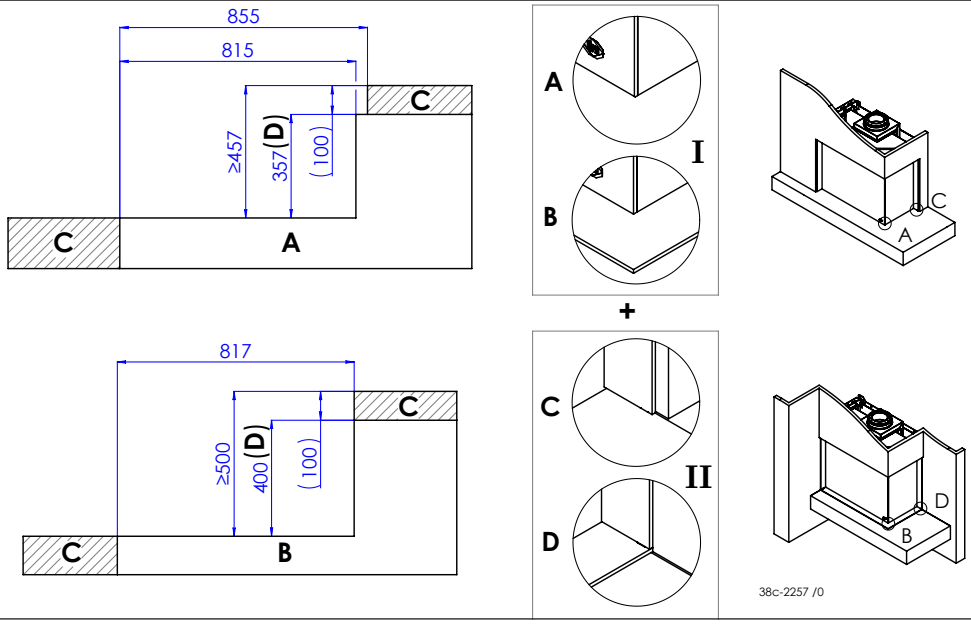
855
815
C
C
A
≥457
357
(D)
100
A
I
B
+
817
C
C
B
≥500
400
(D)
100
C
II
D
C
A
D
B
38c-2257 /0

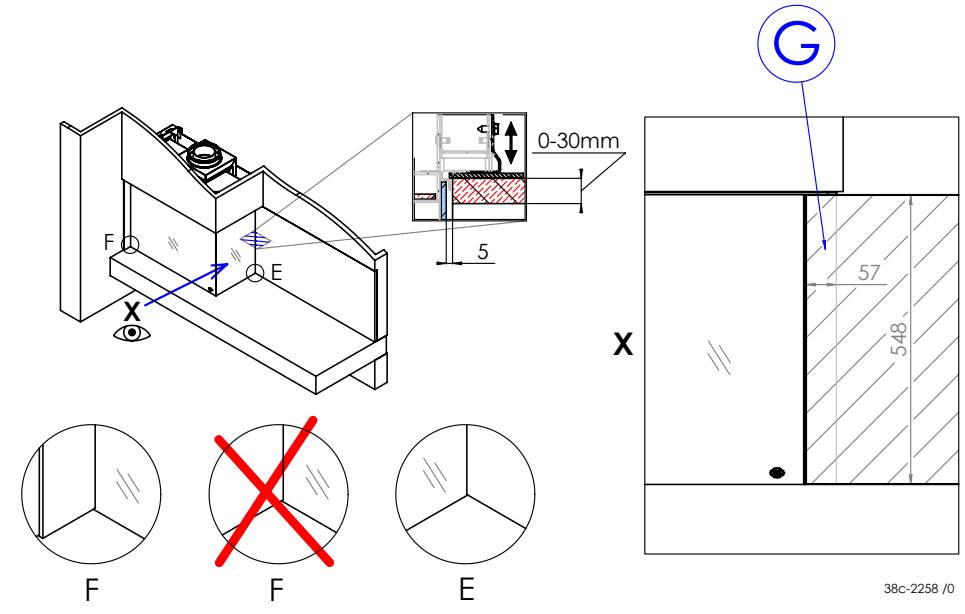
G
F
E
X
0-30mm
5
X
57
548
F
F
E
38c-2258 /0

2e

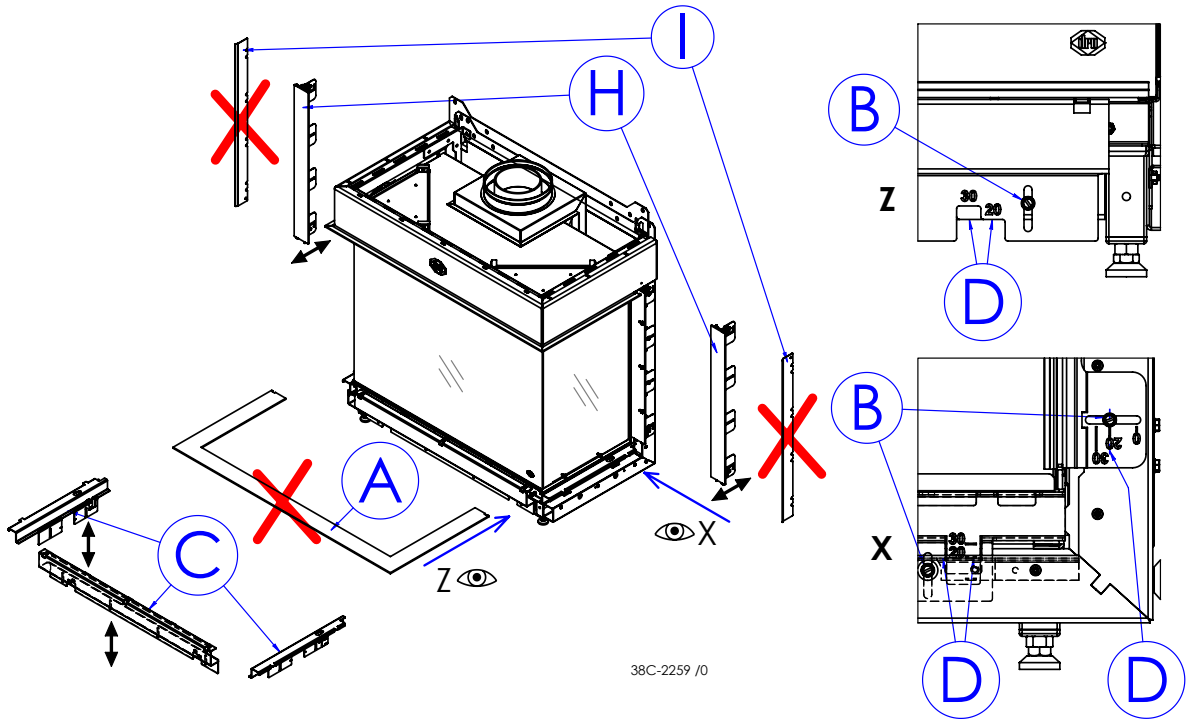

2f

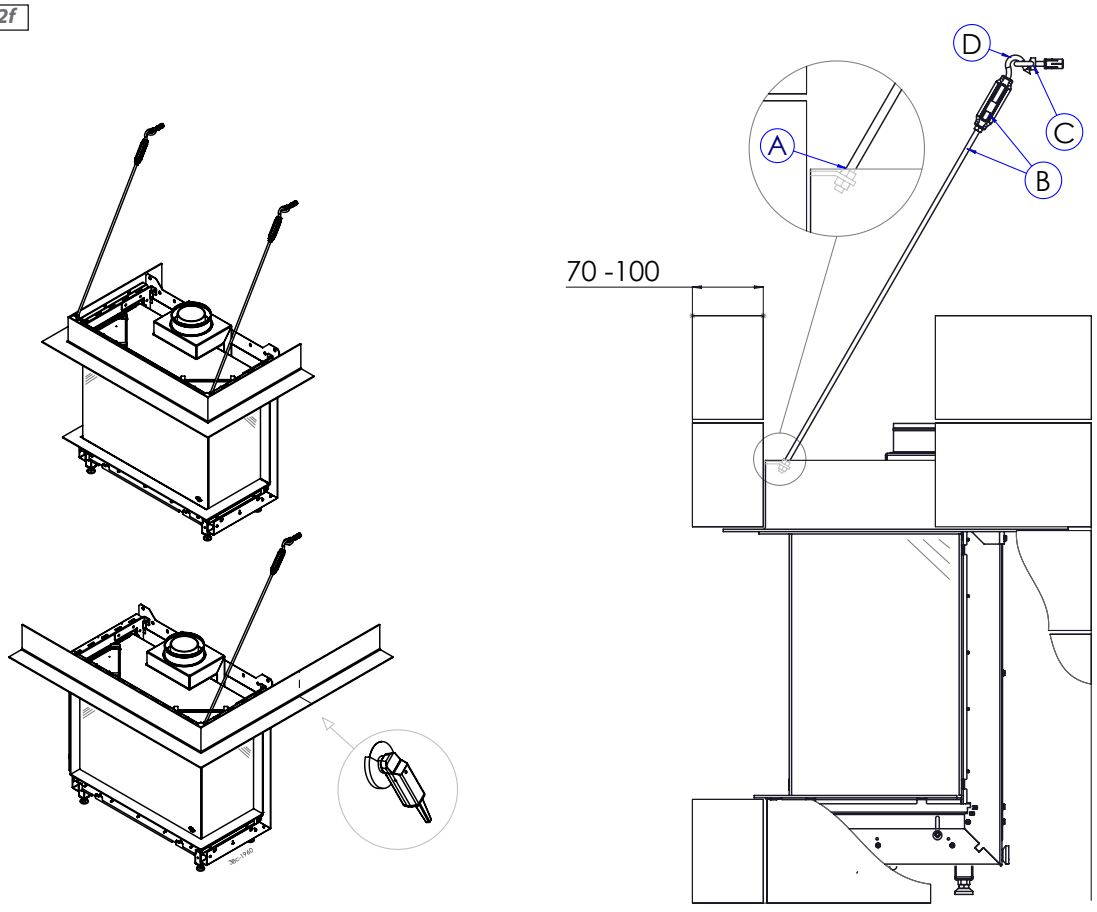

3

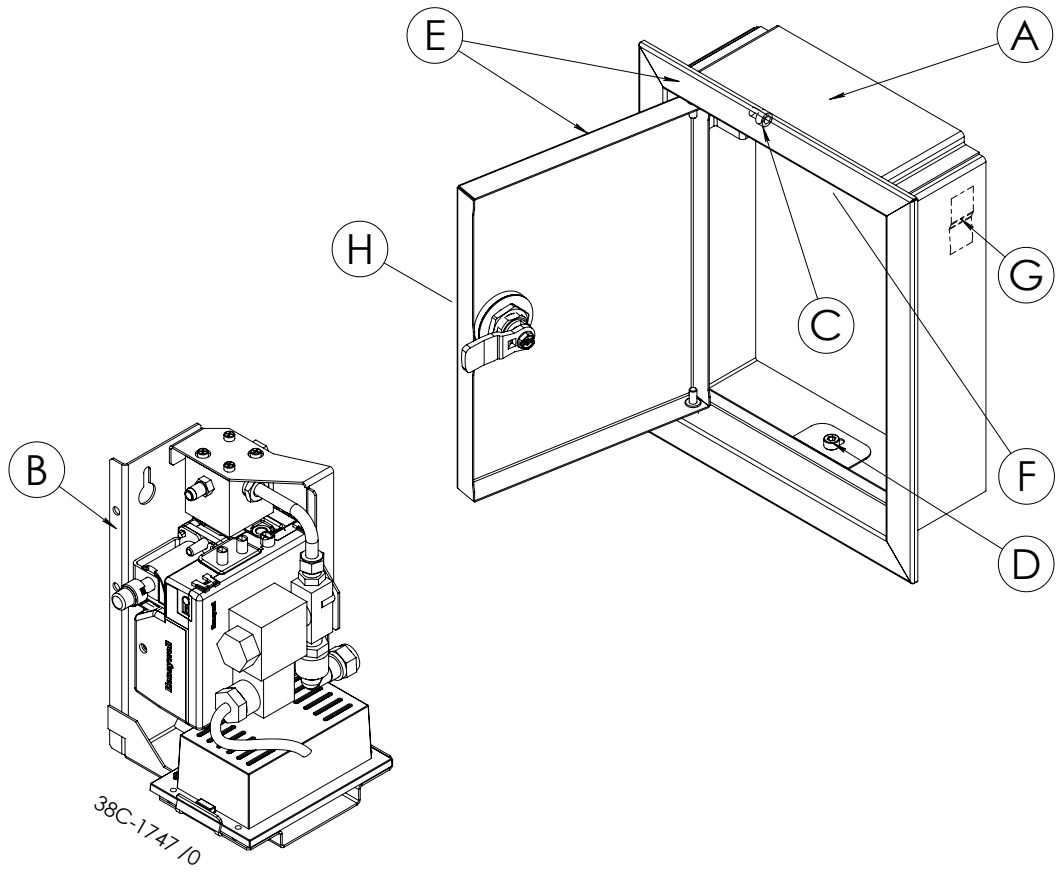
E
A
H
G
C
F
B
D
38C-1747 /0

4

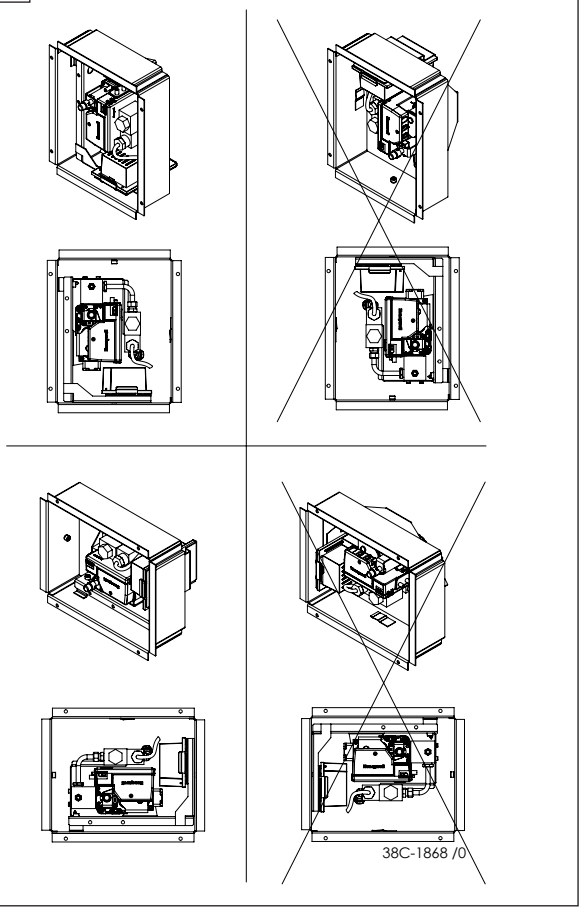
38C-1868 /0

5a

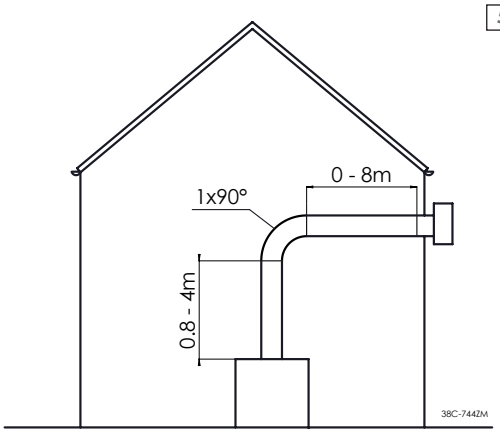
0 - 8m
1x90°
0.8 - 4m
38C-744ZM

5b

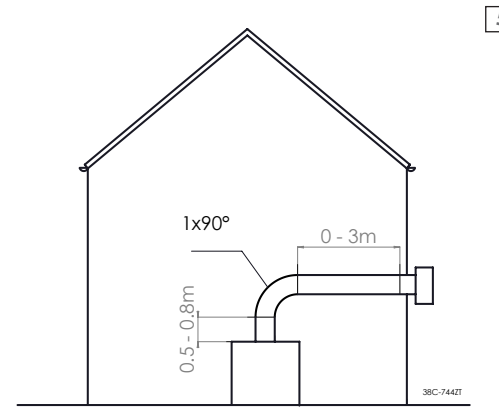
1x90°
0 - 3m
0.5 - 0.8m
38C-744ZT

5c

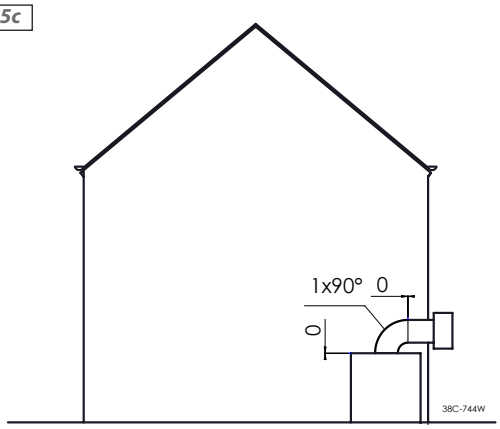
1x90°
0
0
38C-744W

5d

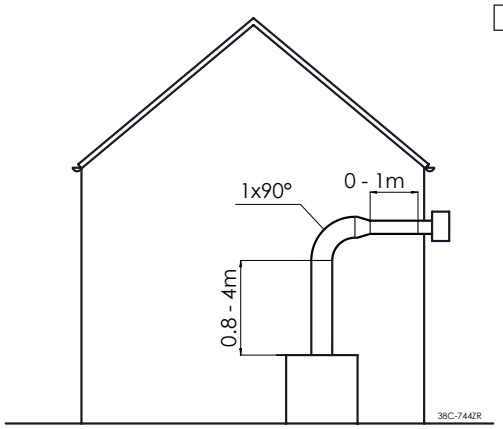
1x90°
0 - 1m
0.8 - 4m
38C-744ZR

5e

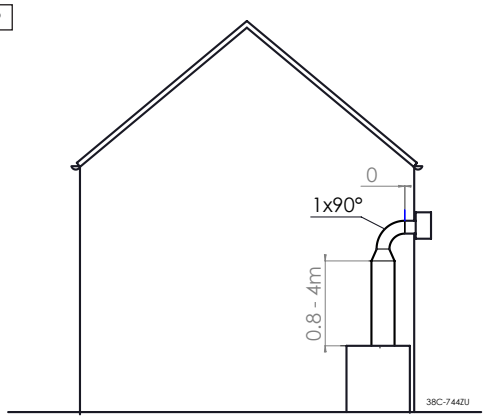
0
1x90°
0.8 - 4m
38C-744ZU

6

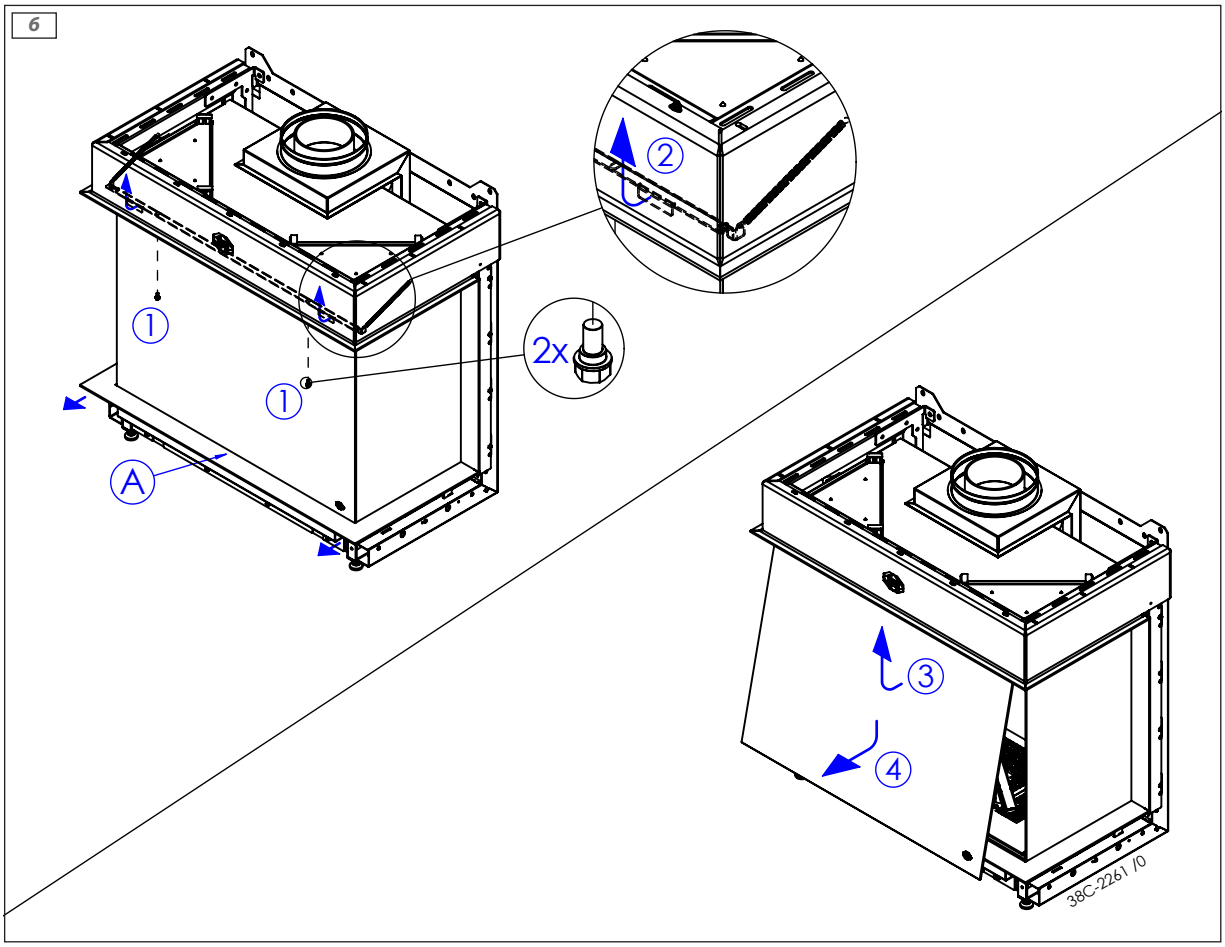
2
1
2x
1
A
3
4
38C-2261 /0

7

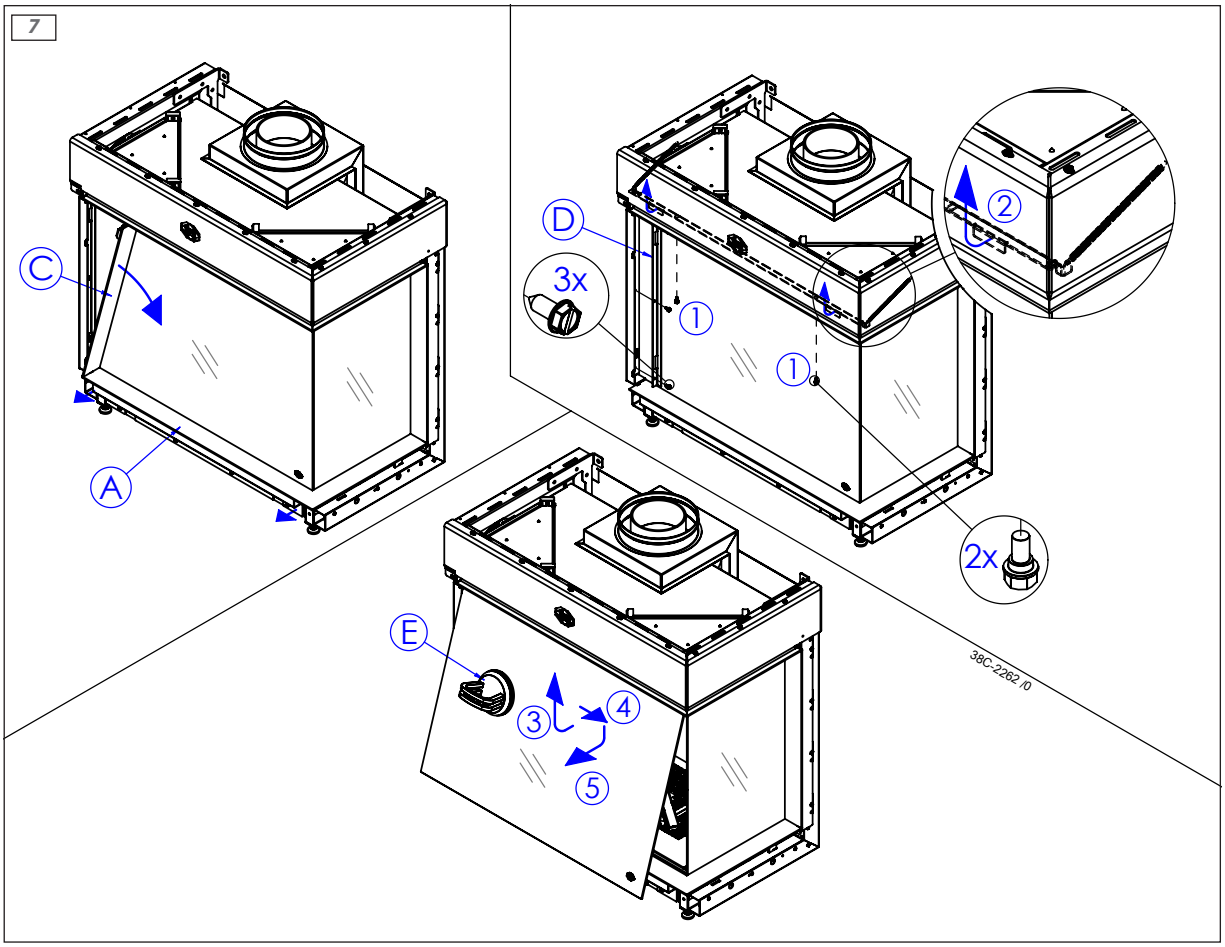

8

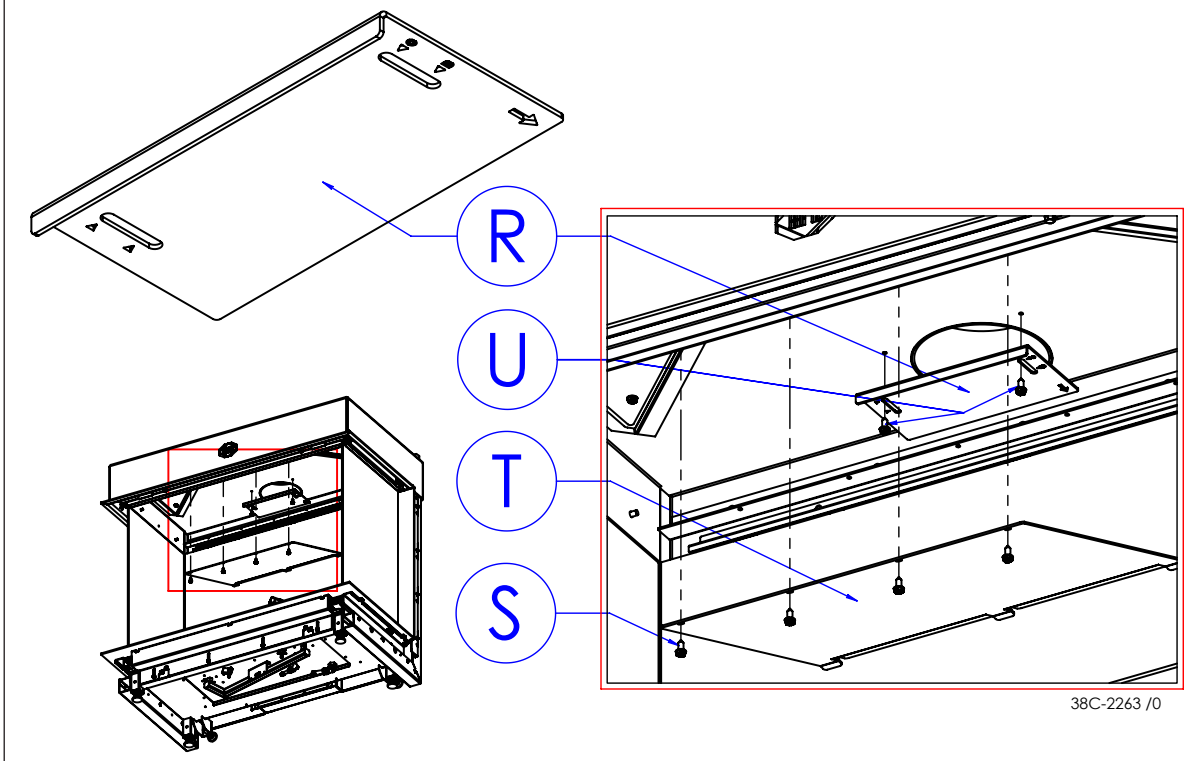

9a

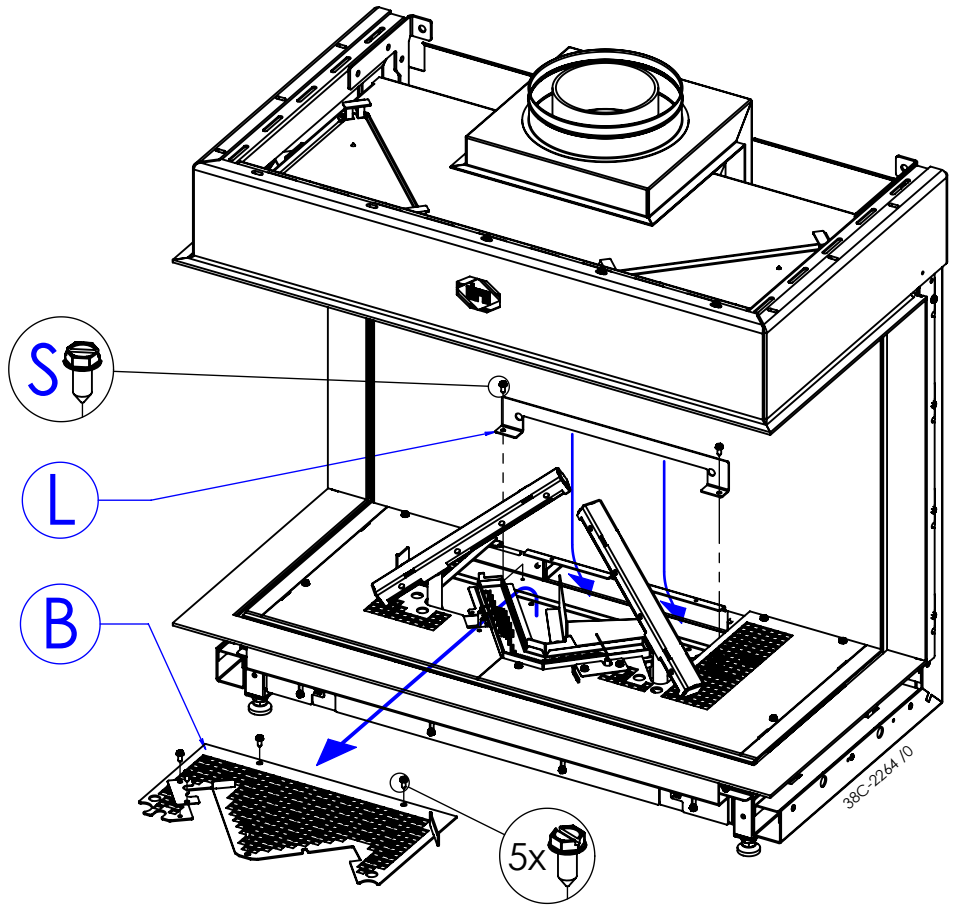

9b

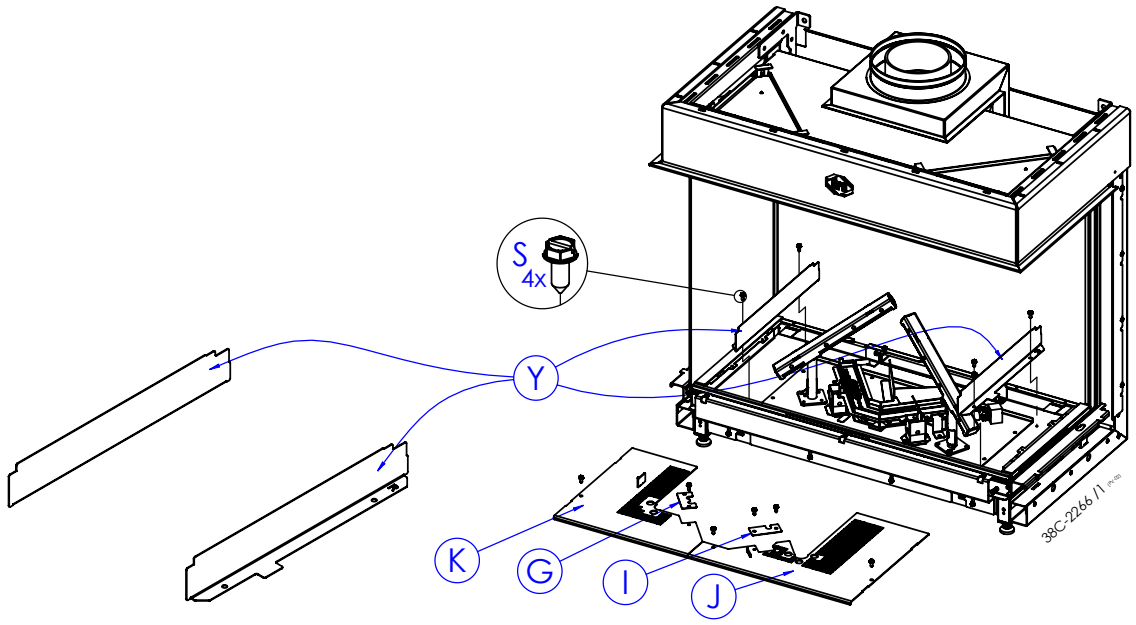

11

12

13

14

15

16

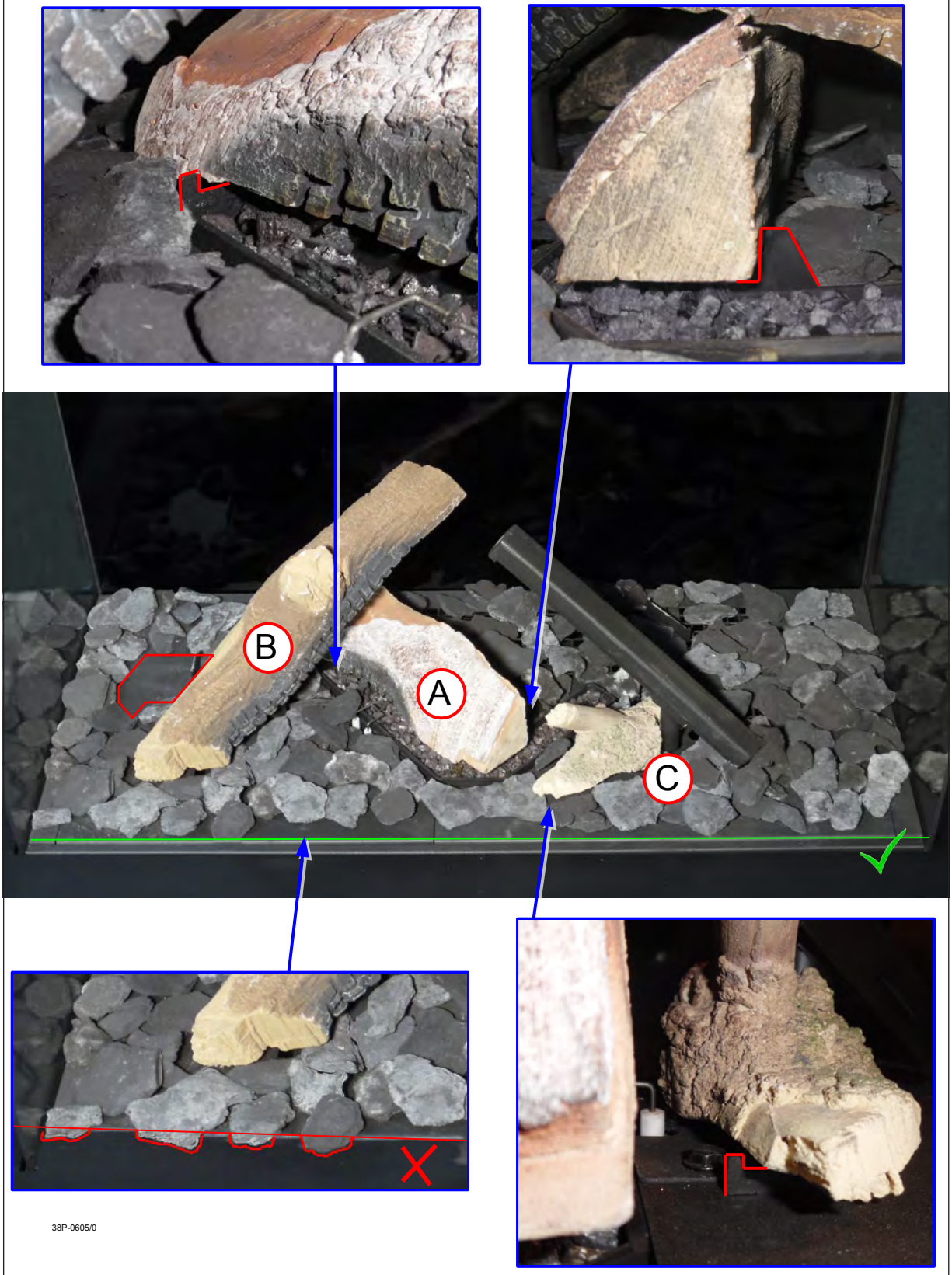

38P-0605/0

17a

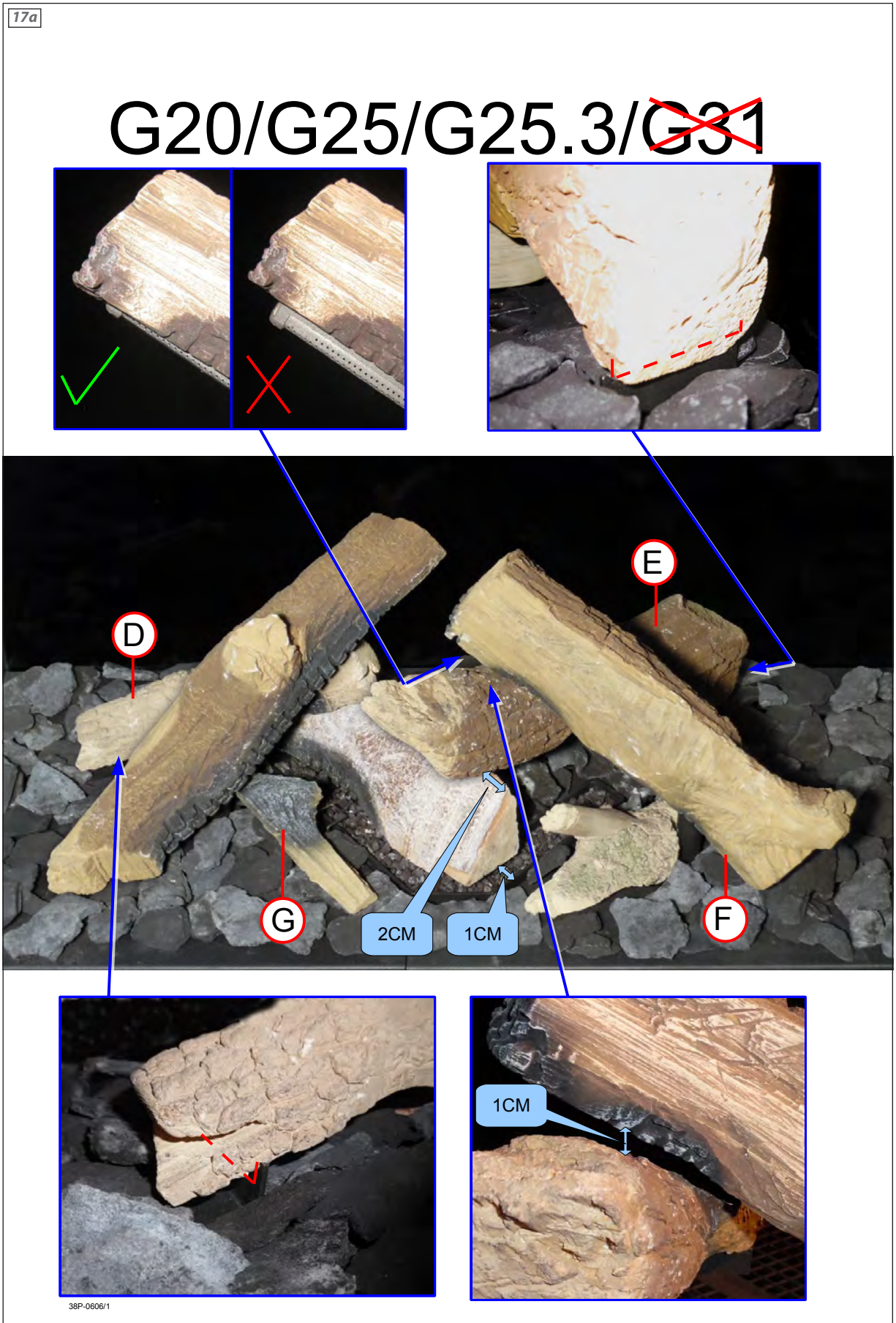

17b

~~G20/G25/G25.3~~/G31

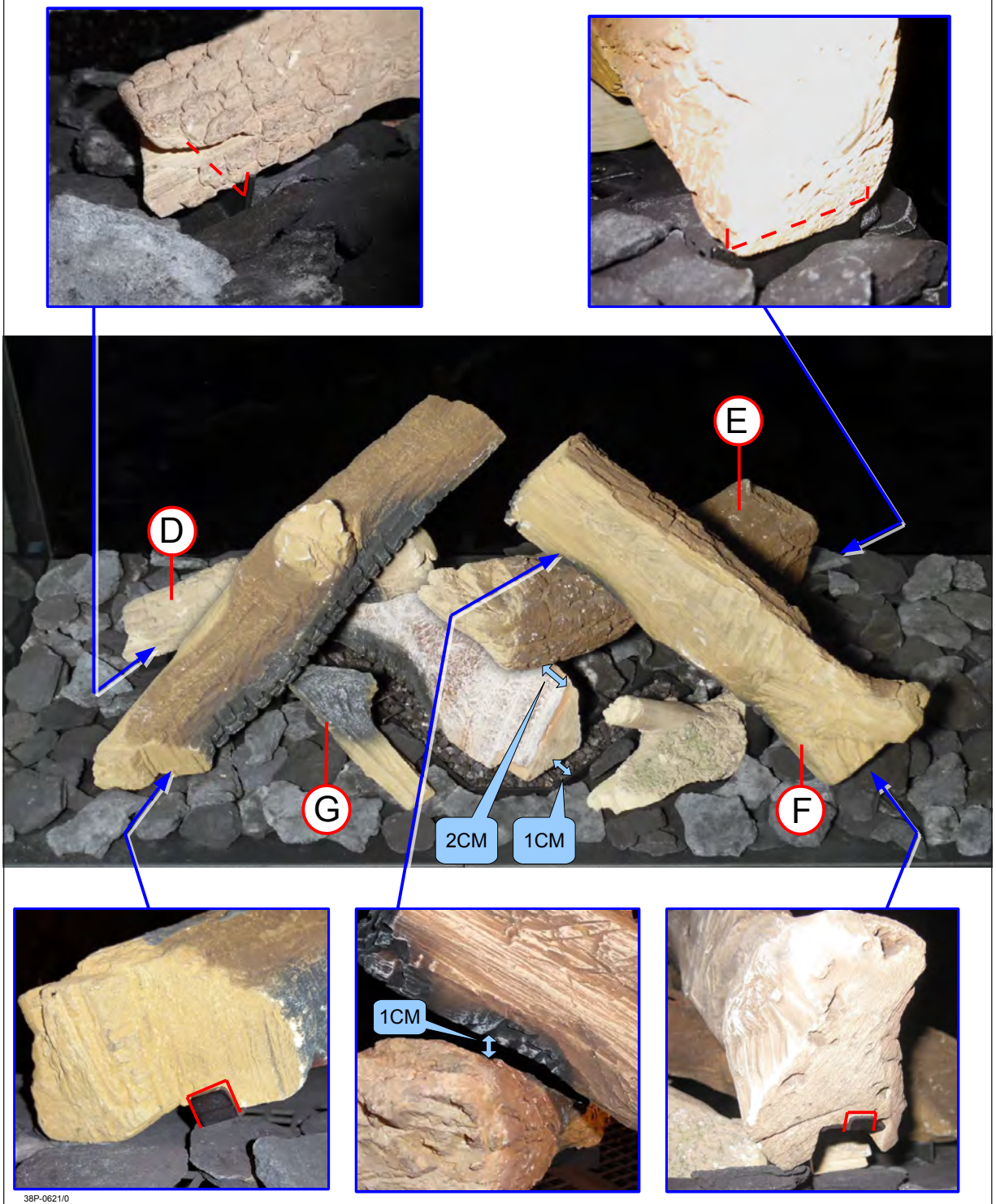

38P-0621/0

18

38P-0610

19

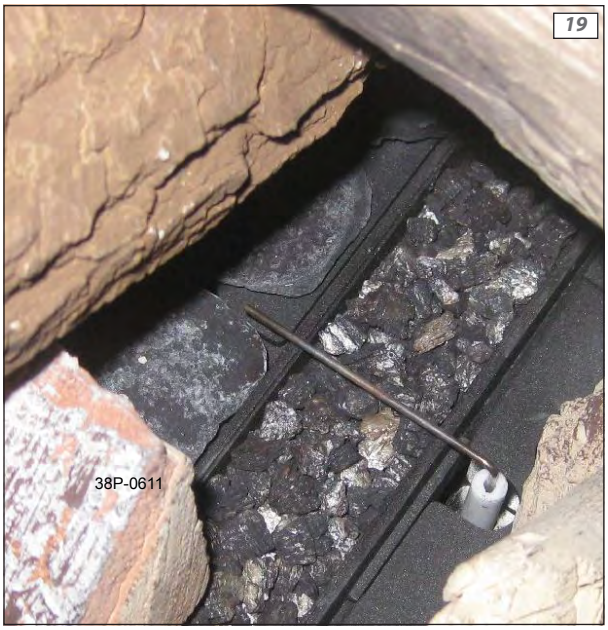
38P-0611

35

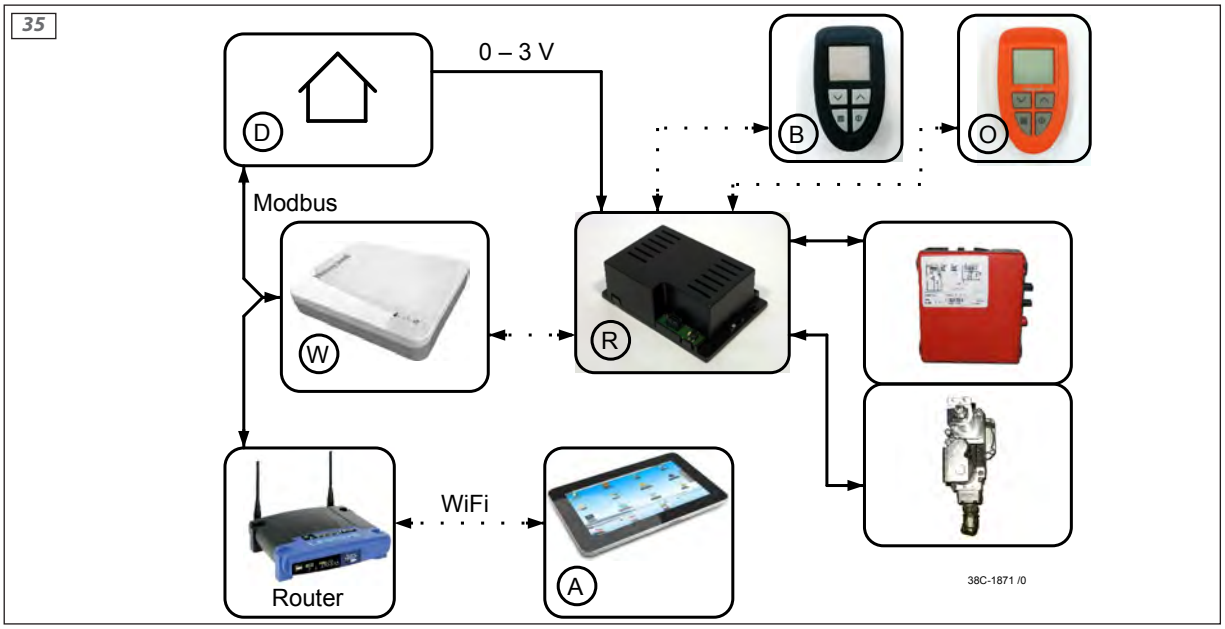
0 – 3 V
D
B
O
Modbus
W
R
WiFi
Router
A
38C-1871 /0

36

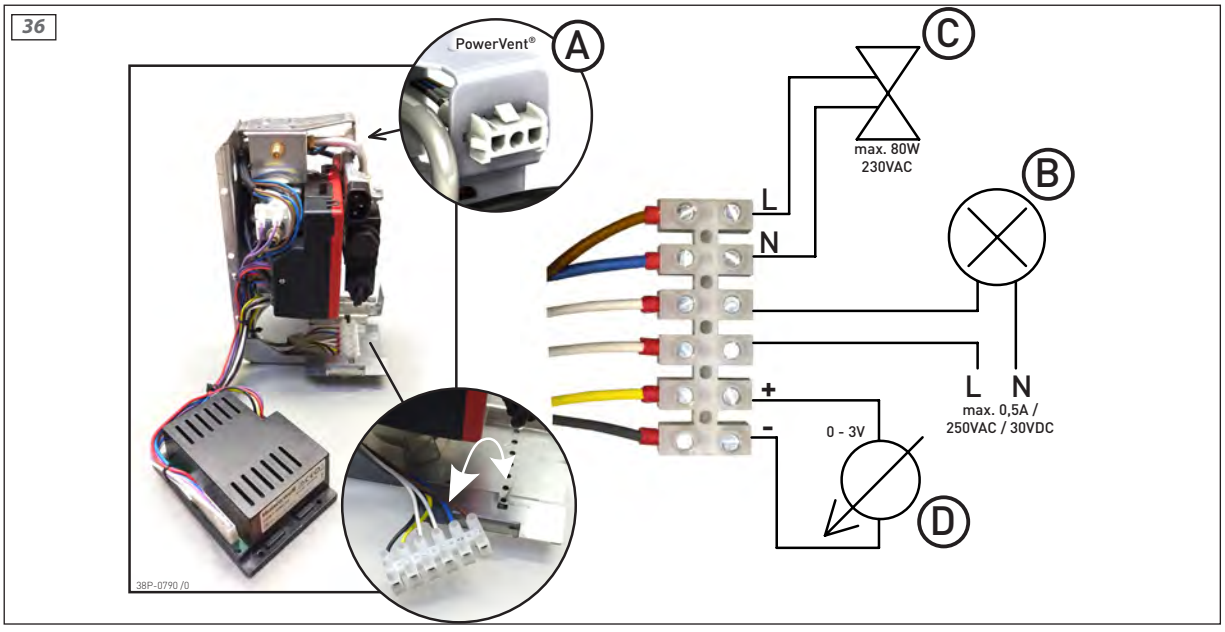
PowerVent®
A
C
max. 80W
230VAC
L
N
B
+
-
0 - 3V
L N
max. 0,5A /
250VAC / 30VDC
D
38P-0790 /0

37

B1			
B	U	🔥	⏻
1	0,00 VDC	0%	I
1	0,08 VDC	3%	I
1	0,16 VDC	6%	I
1	0,23 VDC	9%	I
1	0,30 VDC	13%	I
1	0,37 VDC	16%	I
1	0,43 VDC	19%	I
1	0,49 VDC	22%	I
1	0,55 VDC	25%	I
1	0,61 VDC	28%	I
1	0,66 VDC	31%	I
1	0,71 VDC	34%	I
1	0,76 VDC	38%	I
1	0,81 VDC	41%	I
1	0,86 VDC	44%	I
1	0,90 VDC	47%	I
1	0,94 VDC	50%	I
1	0,98 VDC	53%	I
1	1,02 VDC	56%	I
1	1,06 VDC	59%	I
1	1,10 VDC	63%	I
1	1,14 VDC	66%	I
1	1,17 VDC	69%	I
1	1,20 VDC	72%	I
1	1,24 VDC	75%	I
1	1,27 VDC	78%	I
1	1,30 VDC	81%	I
1	1,33 VDC	84%	I
1	1,36 VDC	88%	I
1	1,39 VDC	91%	I
1	1,41 VDC	94%	I
1	1,44 VDC	97%	I
1	1,47 VDC	100%	I
	1,98 VDC	**Off >**	**O**
	2,00 VDC		**O**

B2			
B	U	🔥🔥	⏻
1	0,00 VDC	0%	I
1	0,08 VDC	6%	I
1	0,16 VDC	13%	I
1	0,23 VDC	19%	I
1	0,30 VDC	25%	I
1	0,37 VDC	31%	I
1	0,43 VDC	38%	I
1	0,49 VDC	44%	I
1	0,55 VDC	50%	I
1	0,61 VDC	56%	I
1	0,66 VDC	63%	I
1	0,71 VDC	69%	I
1	0,76 VDC	75%	I
1	0,81 VDC	81%	I
1	0,86 VDC	88%	I
1	0,90 VDC	94%	I
1	0,94 VDC	100%	I
2	0,98 VDC	6%	I
2	1,02 VDC	13%	I
2	1,07 VDC	20%	I
2	1,10 VDC	25%	I
2	1,14 VDC	31%	I
2	1,17 VDC	38%	I
2	1,20 VDC	44%	I
2	1,24 VDC	50%	I
2	1,27 VDC	56%	I
2	1,30 VDC	63%	I
2	1,33 VDC	69%	I
2	1,36 VDC	75%	I
2	1,39 VDC	81%	I
2	1,41 VDC	88%	I
2	1,44 VDC	94%	I
2	1,47 VDC	100%	I
	1,98 VDC	**Off >**	**O**
	2,00 VDC		**O**

38C-1903 /0

38

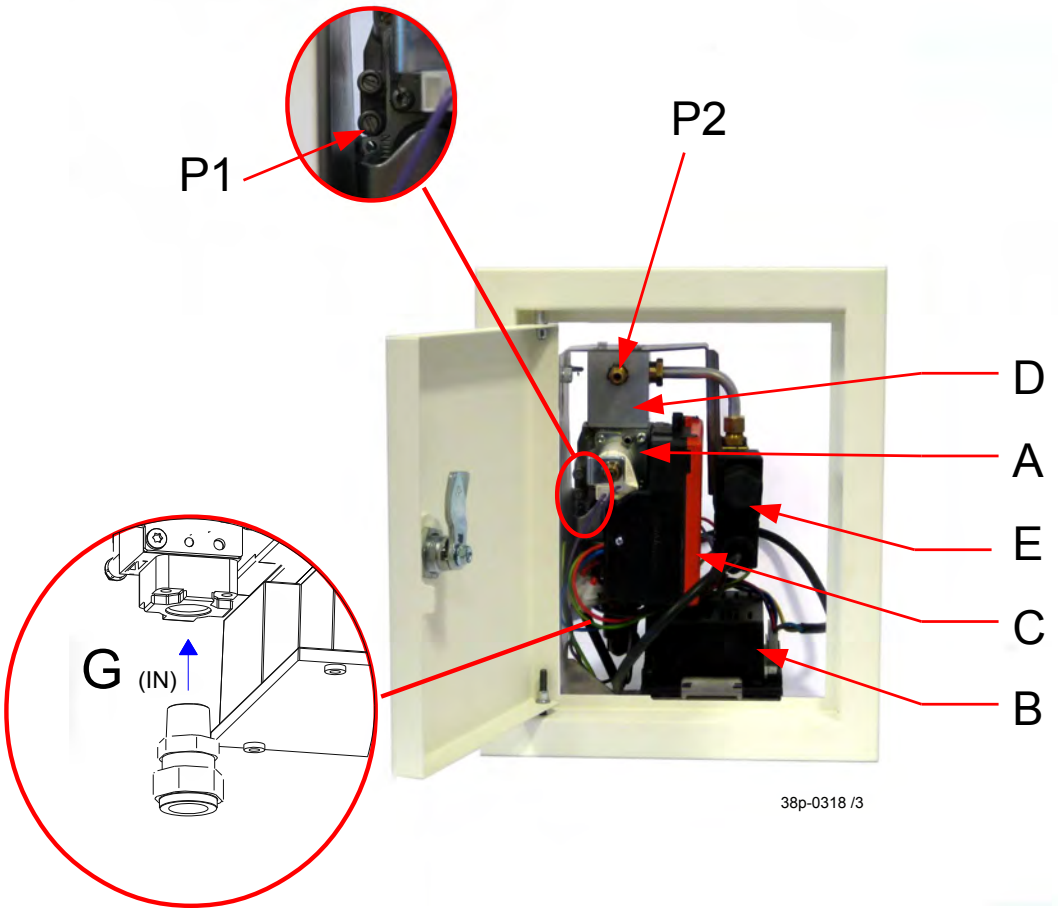

38p-0318 /3

40

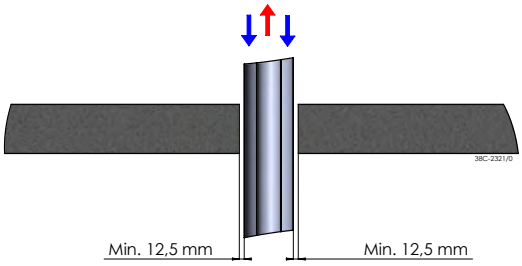
38C-2321/0
Min. 12,5 mm
Min. 12,5 mm

41

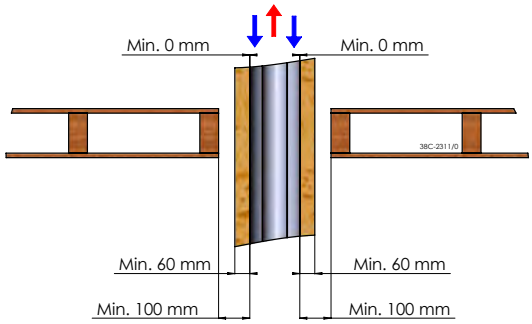
Min. 0 mm
Min. 0 mm
38C-2311/0
Min. 60 mm
Min. 60 mm
Min. 100 mm
Min. 100 mm

English

DRU Verwarming B.V.
The Netherlands
Postbus 1021, NL-6920 BA Duiven
Ratio 8, NL-6921 RW Duiven